Louisiana

Department of Transportation And Development

Traffic Control Standard

Number 18A

Revised

February 26, 2004

Traffic Control Standard #18A

TRAFFIC SIGNAL CONTROL SYSTEM

Approved

J. W. B.

2-26-04

1.0 INTRODUCTION

This specification sets forth the minimum requirements for a shelf-mounted, digital, solid-state traffic control system including and to be furnished with time-based coordination, closed-loop system communication/coordination, multiple railroad/fire preemption sequences, and hardwired/telemetry interconnect capable of operating as both a master and secondary. All components needed to operate as both a master and secondary shall be provided for in each assembly. The system design shall be based on the requirements of NEMA Standards Publication No. TS-2, 1998. Controller sequencing referenced in this standard for diamond intersections emulates the design and standards from the Texas Department of Highways and the Texas Transportation Institute. The controller should have a database that conforms to section 3.5 of the current NEMA NTCIP specifications

All components and accessories shall comply with the NEMA testing requirements and a certification of compliance shall be presented with each bid for that equipment being offered. The operational requirements herein extend the requirement of NEMA controllers and supersede NEMA TS-2 where differences occur.

All equipment and operational characteristics specified herein shall be provided, except where noted.

2.0 CLOSED-LOOP COMPUTER OPERATING SYSTEM

The closed-loop central operating system shall be a traffic management program for hard-disk supported IBM personal computers and compatible equipment which creates a system network using the principle system components. The software shall operate using Microsoft's Windows operating system. The software shall be programmed resident for the operating system.

2.1 SOFTWARE DESCRIPTION

The software shall be loaded into the specified personal computer and operationally verified by the supplier. Back-up software shall be supplied on a compact disk.

The software shall be licensed to the agency for its use on a single computer or each computer specified in the system. Software improvements and enhancements to the supplied version shall be furnished to this agency at no additional cost. Software is supplied when indicated on the plans for a state job and will be specific to a highway district.

Programming displays, on the PC screen, shall aid the operator in entering data from the PC keyboard. These displays shall be arranged in using a tool bar format. The main tool bar shall allow the user to select a major function. A sub-tool bar shall be allowed for selection of a specific area within that function when it exists.

The central computer software shall provide rapid movement through menus, sub-menus and data base pages and limited only by the operating speed of the computer. Returning to the main menu or sub-menu shall be selected by pressing a single key.

Menus and sub-menus shall not contain mnemonics or codes for descriptions. Additional screens shall be provided where necessary to explain keyboard procedure. All icons that are defined within a tool bar shall be described in a help line as the cursor is placed over that icon.

Traffic engineering terminology shall be used throughout the programming displays. Display organization and data entry approach shall allow system operators to program the central computer without using reference cards or manuals.

2.2 SOFTWARE FEATURES

Once the computer power-up routine is complete, the system shall be in monitor mode. It shall be possible for the operator to exit this mode and enter the user mode, and vice-versa.

In monitor mode, central computer shall continue to monitor events even if the printer is off-line. Upon restoration of the printer, it shall print a hard-copy of events occurring prior to and during printer off-line.

Central computer software shall provide:

a. Dynamic Displays
b. System Printouts
c. Data Base Management
d. Security
e. Directories
f. Data Back-up

2.3 DYNAMIC DISPLAYS

Central computer shall display the following in real-time color graphics selected from the menus:

a. Intersection Display
b. System Map Display

All text data shall be displayed in traffic engineering terms. Mnemonics shall be acceptable; however, the need for reference guides and manuals shall not be acceptable. All information shall be simultaneously and continuously displayed until canceled by the operator. Displays shall not affect system on-street operation. The displays shall have a minimum one second resolution.

2.3.1 Intersection Display

The central computer shall display the operation of any selected intersection controller within any selected system.

Each display shall be user-created to indicate the intersection configuration, including any "T" and standard diamonds, on a single screen display. The intersection display shall show as a minimum:

a. Intersection configuration layout for all possible phasing of intersection controllers including overlaps.
b. All vehicle signal indications, (R,Y,G) for each active phase.
c. All pedestrian signal indications: walk, flashing and solid don't walk, for all 16 active phases.
d. Vehicle and pedestrian detector actuation for each displayed phase.
e. Cycle, offset, split or plan in effect.
f. Arterial master and intersection controller identifier numbers, including intersection street names.
g. Central computer and local intersection controller TOD clocks.

The display shall include dynamic statuses of the arterial master and the intersection controller. Arterial master status shall consist of operational status, cycle, offset, split, plan in effect, cycle length, cycle countdown, and status of special functions. System control mode status shall include manual, external, time-of-day, or traffic responsive operation. This status shall indicate whether the system is operating under plan, time-base coordination, or time-base backup.

Intersection controller dynamic data shall consist of operational status; non-interconnected coordination, coordination offset value, or free/plan indicator; split values based on cycle and split in effect; preemption status; and diagnostic indications. Operational status shall include on-line, off-line, failed, or disabled. If the intersection controller is off-line or failed, the conditions causing that failure shall be also displayed. All diagnostic indications having alarm status shall be shown flashing. Alarms, preempt call numbers, and preemptor in effect shall also be shown. If preempt is in a flashing operation, it shall be displayed as flashing.

2.3.2 System Map Display

System Map Display shall provide geometric layout of the system for a minimum of 32 intersections simultaneously and show real time display. The display shall also indicate the relative placements for a minimum of sixteen system detectors. Any intersection shall be selected to present a full screen display as stated the section 2.3.1.

A map editor shall permit the user to lay-out the intersections in their relative physical relationship to each other, place the system detectors anywhere along the approaches, and number the intersections appropriately. Five-legged intersections, central business district layouts (CBD), and angled approaches shall be possible.

A text editor shall permit the user to create a minimum of 50 20-character strings and place them on the display. This feature shall allow labeling streets, detector identification, or other points-of-interest. All text would preferably be placed at any angle on the screen. For instance, street names shall follow the angle of the drawn street (horizontal, vertical, or diagonally), if desired.

Display data shall include current system operating parameters, special function status, cycle countdown, zone control mode of operation, and consolidated intersection status.

Consolidated intersection status shall indicate if an intersection is on-line, free, has a coordination fault, is in preemption or flash, or has a communication failure.

2.4 SYSTEM PRINTOUTS

System printouts present system readiness and operational status and are used for analyzing system performance. The printouts shall be divided into four categories: Computer Events, Event Reports, Status Reports, and Logs, as detailed in this specification.

2.4.1 Computer Events

The central computer shall provide a monitor mode of operation to receive status change and operating failure event reports from any arterial master or isolated controllers.

Events shall be switchable for display on the central computer terminal or printed as a hard copy when they are received. Events shall consist of system identification, time and date of event occurrence, device identification (if device diagnostic event), and event description.

The central computer shall store events in a hard disk file to produce event reports, as needed. It shall be possible to transfer event files to a storage diskette for historical record keeping. Event files shall be removed from hard disk after file transfer to storage diskette to prevent overflowing the hard disk.

2.4.2 Event Reports

Event report capability shall be provided for events occurring on one day or group of days from central computer files on the hard disk or storage diskette.

A directory search capability shall be provided that lists all event files for any system by date, on the selected disk drive. If one day is selected, the date shall be entered directly or by directory search. Directory search shall be used to select dates for event reports for a group of days.

It shall be possible to display and print events as received or sorted by event type. If event type selected is for a system device, it shall be possible to specify all devices or a single device.

Menus shall be provided to facilitate event type selection. Program operation shall allow interactive operation for preparing an event report for any combination of event type and system device.

2.4.3 Status Reports

Status reports shall be generated by the arterial master controller in response to a manual command by the operator at the central computer. These reports shall present an immediate record of system operational status on the central computer display. Provision shall be made for hard copy printout.

2.4.4 Logs

Detector data shall be processed by the central computer. Real-time logs shall be printed as received by the central computer while in the monitor mode. System detector logs shall be scheduled, formatted, and sent from the arterial master.

2.5 DATA BASE MANAGEMENT

2.5.1 Programming Displays

A data base management program shall exchange and update data with arterial master and intersection controller. Each arterial master and intersection controller shall have separate data base programming pages. These pages shall contain all the programming options unique to each controller type.

Once data base management is selected from the main menu, a sub-menu shall be presented listing the data base pages available for programming. It shall be possible for the user to scroll through the data pages of a sub-menu or enter and exit a data page without waiting for data to fill the page. For example, page up and page down functions shall permit the operator to go from page 1 to 30, within 5 seconds.

All programming entries shall primarily consist of numerical values, YES/NO or ON/OFF entries. During program entry, the new data shall over-write the old data. If the data is in error, changes shall not be permitted and the user shall be alerted by either an error message on the display or a warning tone.

2.5.2 Upload/Download

All devices shall use upload/download techniques for data base programming. The arterial master shall employ an additional data base programming method through direct data entry.

Upload/download shall transfer the entire programmable data base from/to the arterial master or any intersection controller via the arterial master, with the exception of intersection controller preemptor and overlap configuration.

All upload/download data shall use block transfer techniques, and shall be verified by block check-sum and word parity. Non-verified data shall cause termination of the upload/download with no data transfer taking place. It shall not be possible to load erroneous interval and configuration information to the controller.

Upload techniques shall not cause the system or intersection controller to go off-line. Traffic control operation shall remain intact in all respects.

The program shall compare the data base of any arterial master or intersection controller to the data base on file following an upload. The compare function shall be executed by simple keyboard technique and shall identify any differences between loaded and file data. The system operator shall be able to correct, use, or substitute data values, and proceed with further comparison.

2.5.3 Backup Data Base

Data from the backup files shall be read and verified for programming EEPROMs to be installed in intersection controllers and arterial masters.

2.5.4 Auto Print

Selection to automatically print any or all arterial master or intersection controller data bases that are stored in the central computer shall be provided.

Selection eliminating intersection controllers which are not in service when all intersection controllers are selected for printing shall be provided.

The system shall print only pages within a data base that contain data. Pages with no user-entered data shall be skipped. If a data base is selected for printing, but is not found on the central computer hard disk, it shall be noted on a separate sheet of the printout.

2.6 SECURITY

System security at the central computer shall be ensured through three levels of access. The levels shall be as follows:

a. Supervisor
b. Data change
c. Viewer

The supervisor and data change levels shall have separate access codes that must be entered prior to making data base changes.

The supervisor level shall permit access code number assignments and data base changes. Data change level shall permit data base changes. If an incorrect code is entered, data base changes are denied. Viewer level shall not permit any data base changes.

2.7 DIRECTORIES

System and intersection directories shall include location of arterial masters and associated intersection controllers by name or number.

System directory text shall describe each of the systems. A system name may be entered and shall identify the system in menus, report titles, and arterial master data base pages.

Intersection directory text shall list intersection names and telephone numbers for each associated arterial master. An intersection name may be entered and shall identify the intersection in menus, intersection displays, and intersection data base pages.

The user shall assign names to the intersection controller alarm inputs. These names shall identify alarms in event reports. Each alarm name shall be twenty characters.

2.8 DATA BASE BACKUP AND RESTORE

The system shall include an option for making backup copies on diskettes of the data base files contained in the central computer. All files required to restore the system to operation without the need to re-enter data shall be included on the backup diskette.

The central computer's files containing records of event and buffeted data shall be saved on hard disk when received from the arterial master. Provision for transferring computer files to storage diskettes shall be included. After transfer to storage diskette, monitor files shall be removed from the hard disk by a user selected command. Storage diskette files shall allow for data analysis by the same report programs used for files on hard disk.

2.9 SOFTWARE MAINTENANCE AGREEMENTS

The software agreement for licensing to the Department shall be in force upon the acceptance by the vendor to supply equipment and software to the Department either by purchase order or construction project.

2.9.1 Performance

The vendor shall warrant that the software will perform according to the specifications.

2.9.2 CPU Limitations

The vendor shall agree that it will be the Department's option to use the software on upgraded equipment at any time and use the software on backup equipment for a limited time. The limits of use shall be as previously stated.

2.9.3 Backup Provisions

The vendor shall agree that the Department will utilize off-site storage for the software and backup files. Copies of these files shall be made by the Department as needed within the operational guidelines previously stated.

2.9.4 Operational Restrictions

The vendor shall agree that the Department will utilize the software to monitor any system within the Department's responsibility.

2.9.5 Maintenance Standards

The vendor shall agree to supply the Department with updates to the software. If the updates require upgrading of the Department's equipment, the vendor will provide the source codes to the Department for the version of software provided to the Department.

2.9.6 Source Code

The vendor shall deliver the source code and documentation to the Department to be used in the event of failure to provide support to the software. A viable holding arrangement will be considered as an alternate method for source code to be delivered to the Department at no cost to the Department. This option shall be stated on the order, plans, or other purchase agreements for the controllers, otherwise will not be required.

3.0 SYSTEM COMMUNICATIONS

The controller unit shall communicate with a system master controller, central computer (for isolated intersections), or portable computer connected directly to the controller. Internal settings, including coordination, shall be accessible via an external Hayes compatible modem through the RS-232 interface. The controller unit shall receive system master commands and data transmissions. In addition, it shall transmit the controller unit status, database, and system detector information to the system master. All alarms provided shall be accessible through the RS-232 port by remote interrogation and by automatic dialing initiated by the controller unit.

3.1 SYSTEM COMMANDS

The communication shall allow the controller unit to receive, as a minimum, the following commands:

a. The coordination pattern (selects the Cycle, offset, and split)
b. Time of day and date
c. Special function commands (minimum of four)

d. Free and flash mode command patterns
e. Control of the local system on a specified master controller
f. Request for local status

3.2 STATUS DATA

The status of each of the following functions shall be transmitted from each controller in response to a status request from any monitoring device:

a. Green and yellow status for all phases and overlaps
b. Walk and pedestrian clearance status for all phases
c. Vehicle and pedestrian detector status (8 pedestrian and 64 vehicle detectors)
d. Phase termination status
e. Local Cycle time
f. Coordination status
g. Conflict flash status
h. Local flash status
i. Preempt activity and calls
j. Volume and occupancy data from a minimum of 16 system detectors
k. Status of four user-defined alarms
l. Zone map display data

3.3 UPLOAD/DOWNLOAD

The communication shall provide the capability to upload/download the entire intersection data base to/from a monitoring personal computer. When desired, only a single screen of data can be sent and received from the intersection

3.4 OPERATION

Communication shall operate from communication ports on the front of the controller. The controller unit shall communicate with a system master/secondary controller, central computer, portable computer and/or the conflict monitor with RS-232 serial ports accessible through DB-25S connectors. The reserve connector pin assignments shall be as follows:

Pin #	Designation
1	Frame Ground
2	Transmit Data
3	Receive Data
4	Request to Send
5	Clear to Send
6	Data Set Ready
7	Signal Ground

8	Data Carrier Detect
20	Data Terminal Ready
22	Ring Indicator

The baud rate of each port shall be keyboard selectable for any one of the following rates: 600, 1200, 2400, 4800, 9600, 14.4K, 19.2K, 28.8K, 33K, and 57.6K. The port shall be configured for an eight (8) bit word, one (1) start, one (1) stop bit and no parity.

The communication path shall use a twisted pair of wires. These may be leased lines (Type 3002, voice grade, unconditioned), radio modem, or dedicated cable.

Communication timers shall be programmable from 0 to 9.9 seconds.

The controller unit shall be programmable via keyboard with a user assigned, unique address identifying the master and intersection.

3.5 INTRA-SYSTEM COMMUNICATIONS

Intra-system communication shall be achieved through one of the four RS-232 serial ports defined herein and an external modem. The modem shall not be provided with order unless specified elsewhere.

3.6 RADIO SYSTEM COMMUNICATION (Inter-system) - (WHEN SPECIFIED)

The data radio modem system is for microprocessor based control equipment. The modem is external to any other equipment in the controller cabinet and at the terminus and shall be provided for data transmission and indicated on the plans. The modem shall provide half or full duplex communications. The modem shall connect directly to the controller in accordance with these standards for the auto dial modem stated above.

The Department will provide the necessary management to obtain a study for interference on the above mentioned radio frequencies, coordinate the frequency to be used, and apply for licensing to use the frequency. The equipment shall operate at the assigned frequency and the supplier/contractor shall make the necessary adjustments for correct operation.

3.6.1 Radio Modem

The modem shall meet the environmental requirements of NEMA TS-2 TYPE 2 and be a maximum dimension of four inches high by twelve inches wide by twelve inches deep. Indicators shall be provided on the front of the modem indicating carrier detect, transmit data, and receive data. The following shall be the operating characteristic of the modem:

FUNCTION	CHARACTERISTIC
Frequency Range:	173 MHz or 940 MHz range (Capable of: 138-174 MHz, 406-430 MHz, 450-475 MHz, 928-960 MHz).
Temperature Range:	-30° to +60° C.
Operating Voltage:	120/240 VAC
Transmission Mode:	16F3, 16F9, 15F2
Modulation: (Receive and Transmit)	FSK, Frequencies, 2100 Hz - mark, 1300 Hz - space.
RF connector:	Type N Female
Data connector:	RS-232-C, 9-pin
Sensitivity:	-107 dbm (1.0μV) for BER_1x10^{-3} over the voltage and temperature range.
Decoder type:	PLL FSK Demodulator
Carrier Attack Time:	_ 10mS
Turn Around Time:	10mS Maximum

FUNCTION	CHARACTERISTIC
Power Output:	2 watts extendable to 20 watts, 100% duty cycle.
Frequency Stability:	±5 ppm on all frequencies.
Harmonic Distortion:	5 % Maximum
Compliances:	FCC Part 15, EIA RS-316B, and RS-232-C, as applicable.

TABLE 18A-2
RADIO MODEM CHARACTERISTICS

3.6.2 Antenna

The antenna shall be connected to the modem by transmission cable meeting the Department standards. The antenna shall be a directional Yagi with a minimum of 9 Db gain and five elements. The mounting shall adapt to a one and one-half or two inch mount.

3.6.3 Antenna Tower

The contractor (for projects) shall provide a tower for mounting the antenna at the site as shown on the plans. The height of the tower shall be determined from the frequency coordination study. The tower shall be erected in accordance with the AASHTO standards.

3.6.4 Central Office Radio Terminal

Additional labor shall be provided by the project contractor to install the antenna on the Department's tower, the cable from the antenna to the modem, and the necessary hardware to complete the installation as designated on the plans and in accordance with good engineering practices. The radio modem and auto-dial modem shall be installed in a single 19 inch rack mounting system or on a wall mountable shelf. Mounting equipment and hardware shall be provided by the contractor. The Department will supply one RJ-11C jack for the dial modem and the necessary 120 VAC outlet for the equipment adjacent to the installation as designated by the Department.

The installation shall include lightning protection on the incoming RF cable in accordance with good engineering practices.

3.6.5 Telephone Terminal Boards (For information purposes only)

The following equipment will be installed into the existing PBX equipment for telephone lines needed to implement the system communication. All other equipment specified shall work with this equipment to complete the system's communications. This equipment will be installed in and manufactured by Rolm Telecommunication Company.

TYPE EQUIPMENT	MODEL
16-channel coder	#8551E
16-channel decoder	#8552A
8 channel line interface	#85540A

TABLE 18A-3
TELEPHONE TERMINAL EQUIPMENT

This equipment will be installed by the Department and made ready for the completion of the system.

4.0 SYSTEM MASTER CAPABILITIES

4.1 DESIGN REQUIREMENTS

The system master shall be a microcomputer device that shall control and supervise a minimum system of twenty intersection controllers. It shall provide the communications link between the central computer and each of the intersection controllers within the system. The system master shall be assigned a unique identification number for communications on the same link with other system masters. An optional method for providing system master operation is to include the master operation as part of the software within the secondary controller. This option shall require the operation of the traffic signal control and system master without interference between them. Priority shall be given to the traffic signal control and operation as defined in this section.

Each master shall generate system commands to its associated intersection controllers, either in response to prevailing traffic conditions analyzed by system master using detectors information or by time-of-day scheduling, external command inputs, or manual inputs.

The central plans shall be constructed with the following minimum options:

a. 48 Patterns with a unique cycle length per pattern
b. From one to four offsets per pattern
c. Selection of one split per pattern from a table of 24 programmable splits
d. Selection of one sequence per pattern from a table of 16 programmable sequences.
e. Pattern 254 (NTCIP) causes the intersection to operate in free.
f. Pattern 255 (NTCIP) causes the intersection to flash as programmed internally

The reference point for all cycles shall be programmable by the user. Normally it is initialized to midnight.

A minimum of forty-eight patterns will be provided. Each pattern can make all the selections as defined as in section of 3.5 of the NTCIP NEMA protocol.

The system master shall monitor the operation of all the associated intersection controllers, communication paths, local detectors, and system detectors. User programmable reporting alarms shall initiate failure reports to the designated terminals from a list of user identification numbers. A minimum of four terminals shall be assignable.

System master shall provide:

a. Traffic Plan Selection
b. Crossing Arterial Synchronization
c. Diagnostics
d. Events
e. Logs
f. Reports
g. Data Entry

Alternative crossing arterial synchronization shall be accomplished by using the master synchronization reference point. The operating cycles having the same cycle length will be referenced to the same point. An additional interface method shall be used to operate both arteries on the same cycle length. Associated system control shall also be included for mutual coordination.

4.2 TRAFFIC PLAN SELECTION

The traffic plan shall be selected on a priority basis. The priority order shall begin with the highest being:

a. Manual commands
b. Central System commands
c. Time-of-day/day-of-week/week-of-year scheduled commands
d. Traffic responsive commands.

4.2.1 Traffic Responsive Operation

Traffic plans shall be automatically selected in response to real-time system detector input data. These commands shall be transmitted to, received and implemented by the intersection controllers within the master's system.

A minimum of forty-eight system detector inputs shall be provided and each, if selected, shall be processed into scaled values used for volume, density, and occupancy data. The volume and occupancy scale factors shall be user-specified and programmable through the keyboard into the master for each detector; otherwise a default value of zero shall be entered. Each detector shall be user-programmable as one of two directions or crossing direction.

Detector data shall be processed to provide a value representing traffic conditions for each function. The process shall include:

a. Data computations resulting in values accurately representing vehicle volume (vehicle/hour), occupancy (time detected), and density (vehicle/mile).

b. Comparison of computed values determining the relative volume and density for traffic conditions detected and assigned to directions as stated above.

c. Accumulation of detection values over a user programmable time interval, evenly divided into a minimum of ten sampling periods, shall provide smooth transitions into selected programs designed by the Department to progress traffic through the system. Functional requirement for this process is to select a cycle, offset, and split from user specified values of detector data.

d. User-specified adjustment factors for each function shall be used to make the detector data be within 50 to 100 percent of selected vehicle density characteristic.

Function values shall be compared to user-specified threshold values for traffic plan selection. Plan selections shall not oscillate between plans which have numerically close values. A method of hysteresis shall be used to prevent oscillation.

Ranges for six traffic volume and occupancy levels shall be programmable and used for comparing the master's computed volume and occupancy level from the overall detector data. Level one shall be associated with light traffic with no coordination and level six shall be associated with heavy traffic. Twelve programmable thresholds shall be provided for the master's comparison values to implement plan selection based upon its computed values.

Arterial directional preference shall be determined by computing directional detector data. The magnitude of the difference and directional preference shall be compared to user programmed threshold values to select and implement directional or average offsets.

Split selection shall be based on user assigned system or phase detector data. Programmable weighing of each detector data, as stated above, shall be used by the master for computing each detector adjusted data. The master shall implement the appropriate split by comparing the main street and cross street data. Programmable values shall be used for selecting four levels of increasing values and four levels of decreasing values. If an error condition is detected, the selection shall default to average or user specified value.

Based on the master's computed detector data levels, a user-specified traffic plan shall be selected as the traffic responsive plan. If computed level or computed offset cannot be determined because of detector failures, a default plan shall be implemented from TOD plan or from TBC.

Each traffic plan contains a programmed split command for that plan. Alternately, it shall be possible to select splits and special function commands for user-specified plans based on split demand function values. Four split/special function combinations shall be available.

4.2.2 Time-Of-Day/Day-Of-Week/Week-Of-Year Schedule

Time-of-day scheduling shall be controlled by an internal clock, accurate to the power line frequency. In the event of a power failure, the clock shall be maintained for a minimum of 72 hours. Leap year shall be automatically compensated for and daylight savings time shall be programmable for date of occurrence. A minimum of 24 user-defined programs shall operate on a daily, weekly, and yearly basis.

TOD programming shall follow section 3.5 of the NEMA NTCIP specifications.

Programmable entries shall include:

a. Day-program assignment
b. Start time
c. Traffic pattern (cycle, offset, split, special functions, free, plan command)
d. Traffic responsive plan enable
e. Traffic responsive plan override of TOD
f. Sample period interval
g. Sample period log interval
h. Detector log interval

The arterial master shall update time and date in all intersection controllers in a system a minimum of once every hour.

The arterial master shall include a time comparison feature. This feature shall indicate the need to update the master clock after being compared with the reference clock in the central personal computer. It would be preferred to enable a clock reset from the central computer to update the master clock with the time from the central computer.

4.2.3 External Commands

External commands shall be received from a remote source such as another arterial master. These control signals shall be used to initiate an external plan. Alternatively, the external command inputs shall be used for crossing arterial synchronization. External commands shall override TOD and traffic responsive operation.

4.2.4 Manual Entry

Manual entry from the front panel keyboard or a remote source shall provide the highest priority of plan selection. It shall be the default program if traffic responsive operation fails and a TOD plan is not specified.

4.2.5 Pattern Mode Entry (Test Command)

Mode commands shall allow selection of any defined pattern. Intersection controllers may contain the same or different programs which shall allow sub-system coordination or independent operation under time-base control.

4.3 DIAGNOSTICS

Diagnostic tests shall be continuous checks performed on system detector data, communications, and communication connected devices. Detected faults shall produce event failures at the arterial master and the central computer.

Failures shall be displayed on the arterial master. A fault isolation routine, selected from the front panel keyboard, shall identify the failed device. The operator shall have the ability to display all fault conditions on command.

4.3.1 Power Fail Restart

Following a power interruption, the arterial master shall update the clock and bring itself on-line automatically and gain control of the system.

4.3.2 Device Event Reports

If operating in a system, diagnostic failures shall be reported to the central computer as events. The following devices shall be monitored:

a. Communication
b. Local intersection controllers
c. System detectors
d. Local detectors

Report events shall verify system master and local intersection controller responses. Communication tests can be a specific test or results from normal evaluation during operation and shall be as follows:

a. System Master Test - A system master test failure shall occur when the master does not respond to central computer commands. If a response is received within three seconds following a failure, the failure condition shall automatically clear, restoring system master/computer service.

b. Local Intersection Controller Communication Test - A local intersection controller communication failure shall occur when valid data is not received by the master for five seconds. If data is received within five seconds following a local intersection controller communication failure, the failure condition shall automatically clear, restoring local intersection controller communications.

Local intersection controller events shall indicate CMU flash, local and commanded flash, cycle fail, coordination alarm, local and commanded free, coordination error, preempt, and user-designated events:

a. CMU flash - If intersection controller status indicates CMU flash for a period in excess of a user-programmable period of 0-30 seconds, the intersection controller shall fail and a CMU flash event shall be recorded.

b. Local Flash - If intersection controller status indicates CMU flash is OFF and flash is not commanded from the arterial master, the intersection controller shall be considered off-line and a local flash event shall be recorded.

c. Commanded Flash - If intersection controller status indicates flash, CMU flash is OFF, and flash is commanded from the arterial master, the intersection controller shall be considered off-line and a commanded flash event shall be recorded.

d. Cycle Fail - If intersection controller status remains in the same phase with opposing phase calls for two cycles during coordination or three minutes if the system is free, the intersection controller shall be failed and a cycle fail event shall be recorded.

e. Coordination Event - If intersection controller status indicates a coordination alarm condition, the intersection controller shall be failed and a coordination event condition shall be recorded.

f. Local Free - If intersection controller status indicates a free condition and free is not commanded from the arterial master, the intersection controller shall be considered off-line and a local free event shall be recorded.

g. Commanded Free - If intersection controller status indicates a free condition and free is commanded from the arterial master, the intersection controller shall be considered off-line and a commanded free event shall be recorded.

h. Coordination Error - If intersection controller status indicates a coordination error condition, the intersection controller shall be considered off-line and a coordination error event shall be recorded.

I. Preempt - If intersection controller status indicates a preempt condition, the intersection controller shall be considered off-line and a preempt event shall be recorded.

j. Event 1/Event 2 - If intersection controller status indicates an event 1 or event 2 condition, the intersection controller shall feed back user-designated alarm information and an event 1 or event 2 shall be recorded.

4.3.3 Detector Diagnostics

System detector diagnostics shall check for maximum presence, minimum presence, excessive counts, and no activity. If a system detector is diagnosed as failed or in error, then data supplied by that device shall be automatically eliminated from system computations.

Local detectors shall be checked for maximum presence and no activity only.

Detector diagnostics shall be performed each minute. Diagnostic periods shall vary depending on the diagnostic test.

Maximum presence events shall be generated by a continuous detector call during a user-specified diagnostic period. The diagnostic period shall be user-selected from 0-30 minutes.

Excessive count events shall be generated if a detector volume count is greater than or equal to a user-specified excessive count threshold. The diagnostic period shall be user-selected from 0-30 minutes.

No activity events shall be generated if vehicle counts are not received during a user-specified diagnostic period. The diagnostic period shall be user-selected from 0-255 minutes.

Detectors shall be failed when its operation is not within the specified criteria. A detector that begins functioning within the specified limits shall be returned to a non-failed status and its input used by the controller.

4.4 MONITOR EVENTS

Status changes and operating failure events at any intersection controller or arterial master shall be recorded by the arterial master at the time of failure or event occurrence. Events shall be reported to the central computer on a priority basis.

Reporting priority shall be selected by event or failure. It shall be programmable as: immediate, report with higher priority, or not at all.

Two telephone number entries shall be programmable from the central computer for reporting events to central computer and for reporting device failures to another maintenance computer or terminal. Device failure reports shall be transmitted to the designated computer or terminal only when scheduled by a TOD entry.

If the central computer is busy or off-line, a reporting arterial master shall repeatedly attempt to call at a preset retry interval in the range of three to fifteen minutes.

Reporting shall be selected for directing all events to a central computer and maintenance computer or terminal when this capability is selected. Printed events shall consist of the following categories:

a. Program and TOD changes
b. System events
c. Device diagnostics

4.4.1 Program and TOD Changes

Program and mode changes shall occur automatically as a result of traffic responsive plan computations, TOD scheduling, external, and manual commands. Program and mode event changes shall include the following:

a. In-effect program change
b. Traffic responsive program change
c. Special function change
d. Time-of-day interval change

e. Controller command TOD change

4.4.2 System Events

System events shall be arterial master self diagnostics. The diagnostic messages shall include:

a. Power-off (Comm-failure)
b. Power-on (Comm-failure)
c. Power interrupt
d. Clock error
e. Backup

Power-off event shall be stored in memory and reported when power is restored.

Power-on event shall report the time and date that power is restored. Time and date information shall be accurate if power is off less than 72 hours.

Power interrupt event shall report when power was off for less than one second.

Clock error event shall report when time and date information is different from the central computer reference. This event shall automatically occur whenever power was off greater than 72 hours. A clock error event shall inhibit TOD operation and scheduled reports until the clock has been reset and is functioning correctly.

Backup event shall indicate a data change in the arterial master memory. All memory shall be automatically re-initialized with a backup data base to allow continued operation.

4.4.3 Device Diagnostics

All device diagnostic failures shall be reported as events. Refer to Section 4.3 for diagnostic descriptions.

4.5 REAL-TIME DETECTOR LOGS

Real-time logs shall provide the operator with a permanent record of system detector data. Real-time logs shall consist of the following categories:

a. System detector log
b. Sample period log

4.5.1 System Detector Log

System detector logs shall show actual volume, and occupancy for user-specified system detectors. Volume shall be the number of vehicle counts accumulated, while occupancy shall be the actual percentage of time that vehicle presence was detected during a 15-minute log period.

Detector data intervals shall be user-specified by TOD scheduling. The user shall be capable of enabling and disabling the real-time log without affecting previous entries. At the end of the interval, the arterial master reports the log to the central computer for printing. The log shall not be stored on hard disk.

4.5.2 Sample Period Log

Sample period logs shall show computed parameters used in determining the traffic responsive plan selection. The sample period log interval shall be user-specified as a multiple from 1-6 sample periods by TOD scheduling.

If the default log period is programmed to be zero, the sample period log shall be reported when there is a change in the computed traffic responsive program. The user shall be capable of enabling and disabling sample period logs without affecting previous entries. The sample period log is reported to the central computer for printing. The log shall not be stored on hard disk. The sample period log shall consist of the following:

a. Scaled volume and occupancy for enabled system detectors
b. Scaled volume and occupancy for detector groups with assigned detectors
c. Current value of each program selection function
d. Smoothed value of each program selection function
e. Computed program selection values
f. Selected traffic responsive plan program
g. In-effect program and cycle length

Additionally, the printout shall identify groups that have not been assigned and parameters containing errors.

4.6 STATUS REPORTS

Manually commanded status reports shall be provided to allow the operator at the central computer an immediate record of system operations. Reports shall consist of the following categories:

a. System status
b. Controller failure summary
c. System detector failure summary
d. Current 15-minute system detector log

4.6.1 System Status

System status report shall describe the system operating conditions. The report shall be a concise printout including the following:

a. Traffic responsive program (computed values)
b. Traffic responsive plan
c. Program-in-effect and source
d. Special function status
e. Communication status:
    1. System master communication failure
    2. Local intersection controller communication failure
f. Intersection controller status:
    1. On-line
    2. Off-line
    3. Failed
g. System detector status:
    1. On-line
    2. Failed
h. Local detector status:
    1. Failed

Local detectors shall be identified by intersection controller number and assigned phase. Intersection controller off-line shall indicate a disabled intersection controller or a non-coordinated intersection controller due to the following conditions: preemption, coordination error, local free, commanded flash, or local flash.

4.6.2 Intersection Controller Failure Summary

Intersection controller failure summary shall identify failed intersection controller(s) and probable cause(s). Probable failure causes shall be as follows:

a. Communication
b. Cycle failure
c. CMU flash
d. Coordination alarm

4.6.3 System Detector Failure Summary

System detector failure summary shall identify failed system detector(s) and probable cause(s). The possible failure causes shall be as follows:

a. Communication
b. No activity
c. Maximum presence
d. Excessive counts

4.6.4 Current Detector Log

Current detector log shall show actual volume and occupancy recorded during the last log period. Volume shall be the number of vehicle counts accumulated while occupancy shall be the actual percentage of time a vehicle presence was detected. This data shall be indicated per detector.

4.6.5 Stored Events

Stored events shall be a report of the last events stored in the arterial master (up to 255). These events shall be printed in the order recorded. If the event storage memory becomes full, the newest event over-writes the oldest event.

5.0 COORDINATION/SYSTEM OPERATION COMMANDS

The controller unit shall provide coordination functions to control intersection cycle lengths, system offset relationships, and phase split timing. The coordinator shall perform these functions by internally manipulating the appropriate controller unit inputs. The controller unit shall be programmable for selecting these functions as output during all modes of coordination, controller unit designated as master, secondary or isolated.

Coordination functions shall be provided as a standard controller unit feature. These functions shall be included in the equipment and software provided. Hardwired inputs and outputs for coordination functions shall be through isolation relays, specified elsewhere, and shall be binaurally encoded on the respective cycle and split input lines. The voltage on the hardwired interconnect shall be 120VAC. The input lines shall have no active inputs for cycle one and split one. Cycle four and split four shall be activated by both the cycle two and three or splits two and three inputs being active respectively. Offsets one through three shall be only activated one at a time by the synchronization pulse being superimposed upon active line. The offset line shall operate by using a continuous high (120VAC) interrupted by a low for three seconds at the coordination point. Only one offset line shall be operated at a time. The remainder of the required system operations are not required to operate within a hardwired system.

Alternate methods to the cycle-split concept of coordination shall be evaluated based upon providing programmable time distribution to control vehicle movements within system parameters for traffic progression. A minimum of sixteen "programs" of the alternate method shall be provided and controlled by the inputs specified and shall meet the requirements for coordination.

5.1 TRANSITION CYCLES

The controller unit shall provide a smooth and orderly transition during operational changes in both free and coordinated operations. No skipping of thought movement phases shall be allowed when changing a sequence from a lead-lag to a lag-lead.

5.1.1 Free to Coordinated Transition

During the free to coordinated transition, the controller unit shall complete a pick-up cycle before entering the coordinated mode. The pick-up cycle shall begin upon receipt of a sync pulse and a valid coordination command. During the pick-up cycle, the coordinator shall service all non-coordinated phase calls in normal sequence until entering the coordinated phase(s).

5.1.2 Coordination Command Transfer

The coordination command shall contain the system cycle, offset, and split. Command changes shall be implemented concurrent with a sync pulse. The cycle and split command shall take effect when the local zero point of the existing cycle is reached. Command transfers shall not stop the sequencing of the phases during the change except as noted elsewhere in this standard.

5.2 CYCLE

The coordinator shall provide five cycles. Each cycle shall have a minimum programmable cycle length from 10-255 seconds, in 1-second increments.

5.2.1 Synchronization

Coordination timing shall be synchronized to the leading edge of the system sync pulse (master zero). This point shall serve as the reference for all offset timing.

5.2.2 Sync Monitor

The coordinator shall check for the proper occurrence of the system sync pulse, once each cycle. If a sync pulse does not occur, then the coordinator shall self-sync and continue to operate with the last set of coordination commands.

Self-synchronization shall continue for a minimum of two cycles. If a sync pulse does not occur within the self sync period, the coordinator shall revert to the non-interconnected coordination mode.

5.2.3 Hardwired Interconnect

The controller shall provide for external inputs to be used for coordination. These inputs shall be connected to the wiring for the special connector described elsewhere in this standard. The functions shall meet the requirements as defined in this section.

5.3 OFFSET

The coordinator shall provide a minimum of one offset per pattern. Each offset shall be programmable within the cycle in 1-second increments from 30 to 254 seconds.

The offset shall be defined as seconds from the beginning of the master cycle counter to the beginning of the local cycle counter. When entering splits according to the NTCIP format, it shall be possible to select that the coordinated phase begins with the local zero point or ends with the local zero point. Time of day will be used to Sync the master cycle counter within the local controller. The master cycle count shall be seconds past the programmed reference, modulo of the current selected cycle length.

5.3.1 Offset Correction

The coordinator shall provide offset correction through the following methods:

a. Shortway offset seeking
b. Dwell

5.3.2 Shortway Offset Seeking

Shortway seeking shall establish an offset within the shortest number of cycles by either lengthening or shortening the cycle length. The method provided by the manufacturer shall continue sequencing the phases until the programmed offset is established and shall be limited to a maximum of four cycle lengths. Any method that causes the controller to lose coordination or force to dwell and require the coordination to begin a second re-sync routine will not be acceptable.

Offset changes shall be accomplished by lengthening only if the reduction of the current cycle length is shorter than the sum of the controller unit's minimum vehicle interval lengths. In addition, all offset corrections shall be programmable to be lengthened only.

5.3.3 Dwell

The controller shall dwell in the coordinated phase if this method of offset seeking is selected. The sequence will begin in the first cycle after the offset is established and within the programmed permissive and force-off parameters for that cycle.

5.4 SPLIT

The controller unit shall provide three splits for each cycle. Each split shall provide a split interval for each phase of the controller unit. Each split interval shall be programmable in seconds within the cycle length timing in 1 second increments.

5.4.1 Split Intervals

Split interval settings shall determine the maximum time, including vehicle clearance (yellow and red) for a non-coordinated phase, or minimum time for a coordinated phase during the cycle. These times shall be controlled by establishing a force-off point for each phase within the cycle. Force-off points shall be determined from the phase timing values and split interval settings. Force-offs shall meet NEMA requirements and continue to be applied until the phase is terminated.

5.4.2 Coordinated Phase Split Extension

During coordination, an option shall be programmable to operate the coordinated phase(s) as actuated or non-actuated. If the coordinated phase is actuated, vehicle detections shall permit the coordinator to extend a phase beyond the normal yield point. Extended coordinated phase green shall be selected in seconds or terminated by a force-off setting for that phase. Selection of the CNA I and/or II operation per cycle will meet the non-actuated operation with the selected phase remaining green until the programmed force-off for that phase is reached.

5.5 PERMISSIVE PERIODS

Permissive periods shall be timed in seconds within the cycle length and provided for each cycle or program to control the time period when the coordinated phase is released to service calls on the non-coordinated phases.

5.5.1 Yield Point

The yield point shall be defined as the point within the cycle when the hold input is released on the coordinated phase and the controller unit is allowed to service calls on non-coordinated phases. A force-off point shall be applied at the time the hold is released, unless a force-off has been programmed for this phase.

The yield point shall begin from the coordinated phase split interval and pedestrian clearance plus vehicle clearance time. The coordinated phase pedestrian clearance period shall always begin at the yield point regardless of calls on the non-coordinated phases.

5.5.2 Permissive Periods

All permissive period timing shall begin at the yield point. A minimum of three programmable permissive periods shall be provided. The vehicle portion of each permissive period shall be a programmable timed interval within the cycle length. An automatic pedestrian permissive period shall be allowed for phases following the coordinated phase(s). Each permissive period shall be programmable for selecting phases that would operate during this period. This function shall operate as follows:

a. During the first permissive period, the controller unit shall answer only vehicle or pedestrian calls on the phase(s) following the coordinated phase in the programmed sequence. If the controller unit yields to a call during this period and the all remaining phases are allowed during this period, then other permissive periods shall be inhibited. All remaining calls shall be served in programmed sequence.

b. The second and third permissive periods shall be programmable for beginning and ending after the yield point. During each permissive period the controller unit shall answer calls on each period's programmed phase(s).

c. An alternate method for the permissive period operation described above will be considered. The principle guide lines for controlling phase time shall be followed.

5.5.3 Single Permissive Period

Single permissive period shall become operational by eliminating the second and third permissive periods as described above. This single permissive period shall be similar to the first permissive period, except that the controller unit shall answer calls on any phase in order of the programmed sequence during the permissive period.

5.6 CYCLE PROGRAMMING

In addition to cycle length, offsets and splits, the following functions shall be programmable on a per cycle basis. Alternate methods of function selection shall be controlled by cycle, split, and offset inputs.

5.6.1 Coordinated Phases

Coordinated phases shall be selected for each cycle. If the coordinated phase assignments are changed when transferring between cycles, the coordinator may operate in the free mode until completing a pick-up cycle.

The coordinated phases shall normally operate in the non-actuated mode during coordination. However, it shall be possible to select the coordinated phases to remain in the actuated mode (see paragraph 5.4.2).

5.6.2 Phase Sequence

The controller unit shall normally use a standard quad phase sequence. The controller shall be programmable to select the phase sequence by selecting cycle and split. The phase sequencing shall be selected from the sequences specified previously. The free mode phase sequence shall be programmable from the keyboard and not restricted to be one of the coordinated sequences.

5.6.3 Phase Omit

Phase omit(s) shall be selected during each cycle or program. Additionally, a phase shall be omitted if its split interval value, for the current split, is zero.

5.7 CROSSING ARTERY CONTROL

The coordinator shall be programmable for crossing artery synchronization by implementing dual coordinated phases at an intersection(s). The coordinator shall be programmable for two coordinated phases in a ring assignable to primary or secondary coordination. Phase(s) shall assigned to a secondary coordinator shall time the green of the phase until the force off occurs or shall be controlled by call to non-actuated operation.

In addition, the coordinator shall output a crossing artery sync pulse indicating the beginning of the crossing artery phase split interval. This signal shall be used to establish the master zero for the crossing artery system master.

Dual coordination shall also force a selected crossing artery split to be used. This feature shall optimize a particular split in each cycle for dual coordination.

See section 5.0 for alternate coordination methods and additional artery control.

5.8 FREE

The coordinator shall provide a free mode of operation. During this mode, all coordination control shall be removed from the controller unit.

Free mode shall be selected by coordination commands, external input, or keyboard entry. Additionally, the coordinator shall revert to free mode when active controller unit inputs, or functions, would interfere with coordination. These inputs or functions shall include the following:

a. Manual Control Enable
b. Stop Time
c. Automatic Flash
d. Preemption

5.9 MANUAL CONTROL

The controller unit shall allow entry of manual override commands from the keyboard. Manual commands shall permit individual selection of any cycle, any offset, any split or selection of the complete coordination command. When a manual cycle is selected, the sync pulse shall be generated by the time based control section of the controller unit.

5.10 PROGRAM CONTROL

The alternate method of coordination shall provide manual control that shall select 1 of 16 programs (see section 6.2.3).

5.11 MODES OF INTERCONNECT

The coordinator shall be capable of operating with any of the following interconnect types:

a. Internal Time Based Coordination
b. Telemetry
c. Hardwired

The non-interconnected coordination mode shall also serve as a backup mode to communication or hardwired interconnect (see paragraph 5.1.2).

The coordinator shall be compatible with electromechanical pre-timed interconnect which provides the sync pulse superimposed on the offset lines.

5.12 MASTER COORDINATOR

The coordinator shall output the coordination commands, including sync. This feature shall permit the controller unit to be used as a time-of-day master in a hardwired electromechanical pre-timed interconnected system. This feature shall be included in all controllers and shall not have restricted use.

6.0 TIME-BASED CONTROL/NON-INTERCONNECTED COORDINATION

The controller unit shall include time based control. This capability shall be a standard feature and shall include the additional modules and/or software.

6.1 CLOCK/CALENDAR

The controller unit shall provide a time-of-day (TOD)/99 year clock. The clock shall be programmed for current time (hour, minute, and second), date (month, day, and year), day of week, and week of year. This clock shall be used for all time based control functions.

6.1.1 Clock Accuracy

The TOD clock shall use the power line frequency as a time base. When power is removed, the time shall be maintained by a crystal oscillator.

The oscillator shall maintain the time to within $\pm$ 0.005%, as compared to the Universal Mean Coordinated Time Standard. This accuracy shall be maintained over the NEMA Standard temperature range regardless of the number or rate of power failures.

The controller unit shall maintain the TOD clock during power outages for a minimum of forty-eight hours.

6.1.2 Time and Date Entry

Time and date information shall be entered in the controller unit through the following methods:

a. The controller unit keyboard
b. Computer via RS-232 port
c. Updated via system communications

6.1.3 Leap Year and Daylight Savings Time

The TOD clock shall automatically compensate for leap year changes. Daylight savings time changes shall be programmable to occur on a selected week or be omitted if not programmed.

6.2 TIME BASED CONTROL

6.2.1 Program Format

Time based control shall utilize a yearly program format. The program shall select from a minimum of sixty programs with cycle, offset, and split operations assignable to a day, days of the week, weekend or any one of, selection of more than one or all 52 weeks in the year.

6.2.2 Holidays

There shall be a minimum of 35 holiday or exception-day programs. Each holiday-program shall be assignable to occur on a specific month and day. Holiday-programs shall override the current day-program.

Each holiday-program shall be selected to repeat the following year.

6.2.3 Program Selection

Each program shall permit selection of the following functions:

a. Day program assignment, (Month/Week/Day)
b. Start time, (Hour/Min/Sec)
c. Program, (Cycle/Offset/Split)
d. Control of a minimum of four Special Function outputs
e. Flash
f. Max 1 or 2
g. Free
h. Phase sequence

The cycle/offset/split/sequence or free commands, selected by a program step, shall serve as the coordination program only when the controller unit is operating as a TOD master or operating with time based coordination.

Remaining program step functions shall take effect immediately when the program step becomes active.

6.2.4 Manual Program Selection

It shall be possible to manually force any of the program steps to override the current program step. The forced step shall be entered from the keyboard and shall remain in effect until removed or until the next programmed step.

6.3 NON-INTERCONNECTED COORDINATION

6.3.1 Re-sync Time

When operating in the non-interconnected coordination mode, a programmable synchronization time shall be used as the beginning time for all cycles. All cycles shall be reset to zero, each day, at this time.

6.3.2 Synchronization Point

The synchronization point will be calculated as defined in the NTCIP standard. Computing this point was described in the coordination section. Computing the synchronization point based on event changes or similar methods will not be accepted.

7.0 CONTROLLER UNIT FEATURES

7.1 DESIGN REQUIREMENTS

This specifications set forth the minimum requirements for a shelf-mounted sixteen (16) phase full-actuated solid state controller unit with internal Time-Based Coordination (TBC), railroad / fire (emergency vehicle) preemption, diamond intersection operation, and closed loop master/secondary operation in a traffic signal controller assembly and cabinet assembly.

The controller unit shall meet the requirements of NEMA Standards Publication TS 2 1998 (TS 2), latest edition. Where a difference occurs, these requirements shall govern. The purchase document shall identify either a TS 2 Type 1 interface or TS 2 Type 2 interface. (Stock number for TS2 Controller Timer Unit is 14-06-2710 and TS2 Controller Timer Unit with Ethernet is 14-06-2720).

The controller unit shall be microprocessor based with additional solid state electronics components for memory and data entry of all timing and traffic control functions described herein. The hardware provided shall meet the NEMA temperature requirements certified by an independent laboratory. A resident program shall start the controller operating when power is first applied, without a failure, providing the functionality described herein. The controller unit shall begin using each programmed data for the first occurrence of the event requiring the data and after data is loaded into memory. All units shall be capable of both master and secondary operations as described by these specifications.

The controller unit shall be shelf mountable enclosure containing electronics and hardware for processor/display, input/output interface, system communications, and power supply functions. The enclosure shall be constructed of sheet aluminum and a maximum of fifteen inches wide by ten and one-half inches high by ten inches deep. All exterior surfaces shall be finished with a durable protective coating or anodized. Model and serial number shall be permanently attached and/or displayed on the frame of the enclosure.

The controller unit shall provide electronic circuitry to monitor the operation of the microprocessor. Processor and circuitry faults shall be detected and shall set the voltage monitor output FALSE then indicate an error message on the front panel display.

The controller unit power supply shall provide for isolation and protection against power surges, generate all regulated voltages for internal and external use, and provide power monitoring control signals. The minimum power output shall be 24 watts @ 24 VDC. Additional protection shall be designed into the power supply for radio-frequency interference filtration including a differential and common mode noise filter. Fuse protection shall be provided for the 115 VAC input and 24 VDC power output. These fuses shall be mounted on or accessible from the front of the controller without removing the panel held by fasteners requiring tools for removal.

All timing shall be referenced to the 60 Hertz input power. This reference shall control all timing of the controller unit.

A power retaining component, "super cap", shall be provided for maintaining the time-of-day clock and temporary data storage during a primary power outage. The component shall provide sufficient voltage supply for a power interruption of forty-eight hours. Lead-acid and Ni-Cad batteries are not acceptable.

7.2 KEYBOARD

The programming of the controller shall be accomplished using a keyboard and shall include vehicle, pedestrian, and preemptor calls during test. The keyboard shall be located on the front panel of the controller unit. The keyboard shall be socket mounted for easy maintenance.

The keyboard contacts shall be constructed to be environmentally sealed, highly resistive to oil, dust, water, and most harsh environments and have a minimum rated lifetime of one million operations per key. All keys shall provide positive tactile feel and/or sound to the user.

All keys shall be clearly labeled indicating their function. Numerical keys shall be arranged in a standard telephone pattern. Keys used for YES/NO or ON/OFF entries shall be appropriately labeled. Additionally, data entry control and cursor keys shall clearly indicate their function.

Cursor keys shall provide directional movement of the cursor to any data entry position desired. The cursor keys shall auto-repeat if depressed for longer than one second, to facilitate locating a data entry.

7.3 EEPROM DATA MODULE

User programmed settings and intersection configuration data shall be stored in an electrically erasable programmable read only memory (EEPROM). The device shall have the ability to be reprogrammed a minimum of 1500 times. Sectional programming of the EEPROM for each data entry shall be acceptable only if the Manufacture guarantees the life of the EEPROM under normal use for a period of 10 years and will be at the discretion of the Department. Designs using a battery to maintain user data entries shall not be acceptable. Additional requirements concerning data references are found in section 8.5.

7.3.1 Data Module

To facilitate data transfer from one controller unit to another, the EEPROM device shall be mounted on a sub-module (Data Module). The Data Module shall connect to the processor/display module via a DIN type printed circuit connector.

7.3.2 Firmware

The firmware shall be stored in a Flash ROM. The firmware (proprietary software) updates shall be accomplished by using upload/download unit connected to the controller's RS - 232 port (storage in Flash ROM). It shall not necessary to physically replace hardware components to update the firmware. Connecting the upload/download unit to a communications port on the controller and transferring the new firmware from files on the PC to the controller's PROM memory shall accomplish the update procedure. The components shall accept a minimum of one thousand (1000) firmware updates. The following components shall be supplied to accomplish the firmware update:

1. PC compatible software program to accomplish the transfer with a verification routine.
2. One (1) copy of instruction manual for the entire process.

The update process shall be accomplished at a transfer rate of ninety six hundred (9600) baud.

If the requirements of this section conflict with any provision of this specification (TCS 18A), the requirements of this section shall rule. No provision of this specification shall relieve the Vendor of supplying a controller that meets the requirements of section 7.3.2.

7.4 DISPLAY

A liquid crystal display (LCD) shall be provided on the front panel of the controller unit to display programming and operational status information. The display shall be clearly readable in bright sunlight or dim artificial light without shading the display. The contrast of the display shall be adjustable. If after the Department's evaluation that this requirement is not met then backlighting shall be provided. It shall contain a minimum of four lines with forty alphanumeric characters per line. The display shall have an expected continuous life cycle of ten years while operating in the NEMA temperature range.

7.5 OPERATING DISPLAYS

The display shall have two modes of operation, dynamic and programming. The dynamic mode shall display operational status information, while the programming mode shall display user-programmable information. The normal display shall be either blank or a dynamic display as stated below.

7.5.1 Dynamic Displays

The dynamic displays shall provide a visual status of the real-time controller unit operations. Data entry shall be prevented without a display indicating the location for the data and the data that will be entered in this mode. Data entry during this display is acceptable only as an extra method, not as the primary data entry method.

The dynamic displays shall be accessible via the front panel keyboard. The following status displays shall be specific to each of the major functions of the controller unit.

7.5.2 Controller Timing Displays

The controller timing displays shall be a dynamic display that indicates ring, phase, and coordination status information. Ring status shall include phase timing, current interval and time remaining for both rings, simultaneously. Status messages shall include current vehicle and pedestrian intervals, reasons for phase termination, and Max timer in effect.

Phase status shall indicate the current phase(s) timing and which phase(s) is next to time, vehicle/pedestrian call/recall information and preemptor calls.

The coordinator status display shall indicate the command source, current cycle/offset/split, local/system cycle count, commanded/actual offset, and offset correction. This display shall provide co-ordination relationship to phase operation in real time and be a single display.

The preemptor status display shall indicate calls, preemptor active, and delay period timing. Also indicated shall be preemptor timing, the phase(s) timing while in preemption, interval, and time remaining on the interval.

The detector status display shall indicate activity for all detectors. The display shall indicate detector calls as they are processed by the controller unit.

7.5.3 Programming Displays

The programming displays shall aid the operator to enter data from the keyboard. These displays shall be arranged in a menu format. The main menu shall allow the user to select one of the major functions of the controller unit. A sub-menu is permissible to display selection of a specific area within that function. Cursor keys shall allow the user to move up, down, left, or right through the data of the menu. Multiple data entries shall be shown at the same time to facilitate programming. It shall be possible to return to the main menu or sub-menu by a maximum of two key strokes.

English language and traffic engineering terminology shall be used throughout the programming displays. Display organization and data entry method shall allow traffic engineers or technicians to program the controller unit without using reference cards or manuals. Mnemonic usage shall be minimized and limited to recognized traffic engineering terms.

All programming entries shall consist of numerical values, YES/NO, ON/OFF, TRUE/FALSE, logical 1's/0's entries. During program entry, the new data shall be displayed as it is entered from the keyboard. For quick entry of data, a repeating or copy function shall be provided. If the data is in error, then the user shall be alerted by an error message on the display. Previously programmed entries shall remain until valid data is entered.

7.6 PROGRAMMING

The programming methods shall not affect normal operation of the controller unit.

Download flexibility shall permit individual transfer of each major programmable category or the entire data base at one time.

Controller unit programming shall be accomplished by the following methods:

a. Front panel keyboard through menu access.
b. Downloading data from a LA DOTD computer with Windows software system (including lap-top) running the appropriate software and using the controller unit terminal interface directly or via a dial-up modem.
c. Data module transfer from one controller unit to another as specified in section 7.3.

7.7 PROGRAMMING SECURITY

A four digit code shall be user selected, and stored in EEPROM, for one level of programming security. Display features shall be available without the need to employ the access code. The controller unit shall be supplied with the codes preset to all zeros (0000).

If the access code has not been entered and a data entry attempt is made, then a prompt, requesting the access code, shall appear. Once entering the code, the screen shall revert to the previous display and

data entry shall be permitted. The code shall not appear on the screen at any time. No further access code entries shall be required.

When the access code is required for data entry, the controller unit shall automatically set the locked access mode following a period of keyboard inactivity for eight minutes.

The access code shall be changeable only if the previous access code has been entered. Additionally, it shall be possible to prevent changing the access code from the keyboard.

7.8 MEMORY CLEAR

A memory clear function from the keyboard shall not be permitted for the user to clear data entries. Default values shall be entered by the user to supersede previously programmed data.

7.9 INTERFACE CONNECTORS

All interface connectors shall be accessible on the front of the controller unit and rigidly secured to the controller by the shell of the connector. Three MS-type connectors (A, B, C), meeting the pin assignment and interface requirements of the NEMA Standard shall be provided. A fourth connector, identified as the D connector shall be provided for auxiliary inputs and outputs as specified within this standard.

Four (4) RS232 ports shall be provided for communications with the system software, portable download/upload unit, conflict monitor and intra-system communications. These four (4) ports shall be keyboard-assignable for any of the communications functions. All four (4) ports shall be RS-232 serial port accessible through DB-25, twenty-five pin, subminiature, dual-inline connectors. Additional ports required for closed loop secondary operation shall be supplied, if necessary to support the Vendor's standard closed-loop application software. Each unit shall support all necessary communication ports for both master and secondary operation.

One SDLC port shall be provided per unit in compliance with NEMA TS-2, 1998 specifications.

All connectors shall be mounted a minimum one and one-half inches apart providing hand working room for comfortable installing and removing of the mating connectors.

All inputs and outputs to the controller unit shall conform to the applicable interface and environmental requirements of the NEMA Standard.

7.10 PRINTED CIRCUIT BOARDS

All printed circuit boards shall meet, as a minimum, the requirements of the NEMA Standard. In addition, they shall also meet the following requirements:

a. All plated-through holes and circuit traces shall be plated with solder to protect exposed copper. Any wire jumpers included on circuit boards shall be placed in plated-through-holes that are specifically designed to contain them. Circuit track corrections by track cuts and jumpers that are tack soldered to circuit tracks are not acceptable.
b. Both sides of the printed circuit board shall be covered with a solder mask material.
c. The circuit reference designation for all components shall be clearly marked adjacent to the component. Pin 1 for all integrated circuit packages shall be designated on all printed circuit boards.
d. All electrical mating surfaces shall be gold-flashed.
e. All ICs 14 pin and up shall be installed in machine tooled grade sockets meeting these requirements. All sockets shall be AUGAT-8XX-AG11D or approved equal, meet UL specification 94V-0, be constructed with two-piece, machined contacts and close-ended to eliminate solder wicking. The outer sleeve shall be brass with tin or gold plating and tapered to allow easy IC insertion. The inner contact shall be beryllium copper sub-plated with nickel and plated with gold.

7.11 SERVICEABILITY

The controller unit design shall use printed circuit boards that plug into an internal harness array and/or connector plug within the unit. All circuit boards shall be mounted vertically. Transformers, capacitors, and transient suppressor components are exempt from the above requirement.

The controller unit design shall allow easy removal or replacement of a circuit board. All printed circuit boards shall be keyed to prevent improper installation.

The controller unit enclosure shall be constructed to allow complete disassembly using hand or standard screwdriver operated fasteners. The unit shall be designed for adequate accessibility to troubleshoot and test one side of any circuit board while the unit is still in operation. If testing cannot be accomplished with boards in their assigned position then extender boards or cables may be used. Only one board at a time shall be required to be moved during testing.

7.12 SERVICE EQUIPMENT (to be provided when stated on order)

One set of cables and/or extender boards shall be provided with each order of ten controllers, two sets for twenty controllers, with a maximum of three sets of cable or extender boards.

One portable controller testing facility shall be provided with each order of ten controllers, two for twenty controllers, and a maximum of three for more than thirty controllers.

The testing facility shall provide switches for testing all NEMA inputs and LED's for all NEMA outputs. In addition, indicators and switches shall be provided for testing all the requirements within this standard except for the communication ports and/or RS-232 connectors.

The facility shall be contained within a weather proof enclosure, with quick release closure latches, and have a carrying handle. All harnesses shall be provided with the standard A, B, and C harnesses permanently wired within the enclosure. The additional harnesses shall be connected within the enclosure with a circular plastic connector meeting the requirements for type and pin assignment for the fourth connector installed in the cabinet. All standard NEMA functions shall be permanently labeled for each indication and switch. All additional inputs and outputs shall be identified with overlays which can be labeled identifying the function.

All servicing equipment shall be identified and documentation shall be provided which includes wiring diagrams and schematics.

8.0 ACTUATED CONTROL

The controller unit shall provide the actuated control functions and operations required by Sections 2, 13 and 14 of the NEMA Standard. In addition, it shall provide the features described in the following paragraphs.

8.1 PHASE SEQUENCE

The phase sequence of the controller unit shall be programmable in any combination of sixteen phases to achieve phase reversal individually or by pairs, one to four independent or concurrent timing rings, multiple rings allowing selection of four phase operated as a concurrent group, or coordination of two rings and one sequential ring divided by one barrier. Sequencing shall be selected by cycle program or timing plan. Selection of the required sequences shall be programmable from any of the following:

a. Full NEMA and NTCIP operation
b. Select a program number for an established phase sequence
c. Select one to four timing rings, with concurrent or sequential phase assignment
d. Select three or four phase diamond

Specific sequences required by the Department shall be selected from the above operation. Program for selecting phases shall include provisions to disable phases with each program, (phase on - off). Alternate sequences may be used to satisfy the above requirements however mutual coordination of the separate rings will be required. All controller units shall provide these sequences.

Diamond sequences shall include two operational sequences for interstate ramp interchanges. The operation of the controller unit as a 4 phase, and 3 phase diamond shall be keyboard selected and the standard timing function required by NEMA TS1 shall be provided for each phase. The configuration shall operate as two independent four phase rings. There shall be two mutually exclusive inputs as

defined in Appendix (pins 12 and 13) that will force the controller unit into 3 phase or 4 phase operation. Additional circuits in this harness shall be for controller and cabinet interlock. Pin 35 listed in Appendix shall be a ground true controller interlock output. The controller shall assert this output when it is present and powered on. Pin 42 listed in Appendix shall be a ground true cabinet interlock input. This input shall be internally pulled up to 24VDC and the controller shall sense this input and operate only when it is present. Special clearance intervals shall be pre-timed programmable and shall be activated within the sequence shown. This shall be overridden while under computer control, TBC control, or by the inputs defined below. Figure 18A-3 illustrates the assignment of phase numbers to the traffic movements. The additional detector inputs shall be provided with these controllers as stated in the pin assignment for the connector.

8.1.1 Four Phase Diamond Operation

The normal sequence of operation shall be phase 2/5 $\rightarrow$ 4/5 $\rightarrow$ 1/6 $\rightarrow$ 1/8.

The point at which operation may be switched from 4 phase to 3 phase operation shall occur by forcing the sequence into concurrent left turns (inside clearance during $\varnothing$ 1 and $\varnothing$ 5).

The loop detector layout for 4 phase diamond operation shall be as defined in Figure 18A-4. Each detector input shall be to the phase shown and provide the normal phase timing required by NEMA TS1. The controller unit software shall provide the additional logic for Detector Circuit operation in the following description:

a. Detector Circuit #1 -
   1. Shall extend phase 1/6 if phase 1/8 is called.
   2. Shall call phase 2/5 if phase B overlap is not green and phase 4/5 is not called.
   3. Extend intervals inside left turn clearance interval.

b. Detector Circuit #2 -
   1. Shall extend phase 2/5 if phase 4/5 is called.
   2. Shall call phase 1/6 if phase A overlap is not green and phase 1/8 is not called.
   3. Extend intervals inside left turn clearance interval.

c. Detector Circuit #3 (45P) and #4 (45S) -
   During the phase 4/5 red condition the 45P detector shall always be active and the phase 45S detector shall always be inactive. A phase 4/5 green plus a phase 1/6 call plus a 0.2 second gap in 45P detection shall disable the 45P detector and enable the 45S detector until the phase 4/5 signal changes to yellow. The circuits then switch back to normal - 18P active and 18S inactive until the condition is repeated.

d. Detector Circuits #5 (18P) and #6 (18S) -
   During the phase 1/8 red condition the 18P detector shall always be active and the phase 18S detector shall always be inactive. A phase 1/8 green plus a phase 2/5 call plus a 0.2 second gap in 18P detection shall disable the 18P detector and enable the 18S detector until the phase 1/8 signal changes to yellow. The circuits then switch back to normal - 18P active and 18S inactive until the condition is repeated.

e. Detector Circuits #7 (25S) and #8 (16S) -

The phase 2/5 detector circuit shall always be active during phase 2/5 red. A phase 25 green plus a 0.2 second gap in detector 25S shall disable this circuit until loss of phase 2/5 green.
The phase 1/6 detector circuit shall always be active during phase 1/6 red. A phase 1/6 green plus a 0.2 second gap in detector 16S shall disable this circuit until loss of phase 1/6 green.
The 0.2 second gaps mentioned above shall be keyboard programmable from 0 to 3.0 seconds in 0.10 second increments or smaller.
The phase 45P detector shall always extend phase 4 during phase 4/6 interval.
The phase 45P detector shall always extend phase 8 during phase 8/2 interval.
An indication shall be provided for both the 45P detector circuit and the 18P detector circuit to indicate when they are active. When a circuit becomes inactive, the indication shall go out and stay out until it again becomes active.

f. Concurrent Timing Requirements -
Refer to Figures 18A-3 for the following descriptions.
The clearance interval phase 4/6 when sequencing from phase 4/5 to 1/6 shall time concurrently with phase 6, however phase 6 may not terminate green until phase 4 yellow interval has timed out.
The clearance interval phase 2/8 when sequencing from phase 1/8 to phase 2/5 shall time concurrently with phase 2, however phase 2 may not terminate green until phase 8 yellow interval has timed out.
All left to right internal clearance (∅1/∅5) times from phase 4/5 to phase 1/8 shall use the same timing settings for minimum green, extension, max green, yellow clearance, and red clearance.
All right to left internal clearance (∅5/∅1) times from phase 1/8 to phase 4/5 shall use the same timing settings for minimum green, extension, max green, yellow clearance, and red clearance.
Separate timing settings for minimum green, extension, max green, yellow clearance and red clearance shall be provided for each of the two external clearance intervals (∅2/∅8 and ∅4/∅6 from ∅1/∅8 to ∅2/∅5 and ∅4/∅5 to ∅1/∅6).

8.1.2 Three Phase Diamond Operation

a. Sequence

The controller unit shall be keyboard selected for 3 phase diamond operation.

The normal sequence of operation shall be, except as modified below, 4/8 → 2/6 → 1/5.

The point at which operation may be switched from 3 phase to 4 phase operation shall be from phase 1/5 to 4 phase inside clearance interval phase 1/5.

The path from 4/8 to 2/6 shall be keyboard selected and selected by the TBC (on a time of day basis) for one of the five possible phase combinations of lead/lag left turn clearance

movements. These possible phase combinations shall be permitted when individual phase gap time expires.

4/8 → 4/6 → 2/6
4/8 → 4/5 → 2/6
4/8 → 2/6
4/8 → 2/8 → 2/6
4/8 → 1/8 → 2/6

The path from 2/6 to 1/5 shall be keyboard selected and selected by the TBC (on a time of day basis) for either 2/6 → 1/6 → 1/5 or 2/6 → 2/5 → 1/5.

The path from 2/6 to 4/8 shall always be through 1/5 and terminated simultaneously. The sequencing shall be flexible and phases shall be terminated bases on traffic actuation and gaps programmed for the phase.

b. Detector Operation

The loop detector layout for 3 phase diamond operation shall be as defined in Figure 18A-4.

The 1P detector shall function as a phase 2 calling detector during phase 4 and as a phase 1 extending detector during phase 2.

The 5P detector shall function as a phase 6 calling detector during phase 8 and as a phase 5 extending detector during phase 5.

8.2 TIMING INTERVALS - ALL SEQUENCES

The controller shall be programmable for the following timing parameters and any of the selected sequences. Each phase shall be timed independently and special clearance phasing described in the diamond sequence may be timed by group.

The following timed intervals shall be programmable in the minimum range for each interval:

INTERVAL	RANGE (SEC.)	INCREMENT (SEC.)
Vehicle passage	0-25.5	0.1
Yellow clearance	3-25.5	0.1
Red clearance	0-25.5	0.1
Added initial min. green	0-25.5	0.1
Red revert	0-25.5	0.1

INTERVAL	RANGE (SEC.)	INCREMENT (SEC.)
Minimum gap	0-25.5	0.1
Delay/extend detector timing	0-25.5	0.1
Walk	0-255	1.0
Pedestrian clearance	0-255	1.0
Time before gap reduction	0-255	1
Time to reduce gap	0-255	1
Min initial green	0-255	1
Maximum added initial green	0-255	1
Overlap timing	0-25.5	.1
Maximum green I, II & III	0-255	1
Maximum green extension interval	0-255	1

TABLE 18A-4
TIMING INTERVALS

8.2.1 Guaranteed Interval

Guaranteed minimum time shall be provided for each phase, overlap, and preempt yellow. Minimum values shall not be changeable or overridden from the programming sources listed in this specification. Guaranteed minimum interval value shall be three seconds.

8.2.2 Maximum Green Intervals

The controller unit shall provide two maximum green intervals per phase, however three are preferable. Maximum intervals shall be selected by either time-of-day or external input.

8.2.3 Maximum Green Extension

The controller unit shall be capable of extending a phase maximum green time by continuous vehicle demand. If the phase terminates by expiration of the maximum time for one successive cycles, then its maximum green time in effect (Max 1 or Max 2) shall automatically be extended by a maximum green extension interval. The maximum green time shall be increased, until it equals Max 3, on each successive cycle that the phase green is terminated by the Max 1 or 2. If the phase gaps out for one successive cycles then the maximum green time shall return to the original Max 1 or 2 value.

An alternate method for providing active traffic responsive timing shall use the volume/occupancy system detectors capability assignment to the phase detector. A preprogrammed cycle plan shall be initiated for providing timing modification to meet the traffic demand.

8.2.4 Volume Density Intervals

Each phase shall have volume density intervals conforming to NEMA standards.

8.3 OVERLAPS

The controller unit shall provide sixteen internally generated overlaps: Each overlap may be programmable as standard or protected/permissive. The capability shall be provided for reassignments of a minimum of four phase outputs to overlap operation shall be in the software for implementing special sequencing requirements and shall not require rewiring the controller signal outputs on the back-panel.

8.3.1 Overlap Timing

Green, yellow and red timing intervals shall be provided for each overlap. These intervals shall permit the overlap to remain green after terminating the parent phase in addition to providing separate yellow and red clearance intervals for the overlap. A programmable feature shall provide a selection of sequencing that would hold all phases red or advance to the next serviceable phase green after the parent phase has terminated and the overlap timing is in effect. In either selection the next serviceable phase interval shall not begin timing until the overlap times have expired. Overlaps shall be controlled by the parent phase if the overlap timing intervals are not programmed. The overlap sequence shall never violate the conventional green, yellow, red sequence under any circumstance. This timing operation shall be provided during all operational requirement herein specified. Any conflicting operation with this timing requirement shall supersede the timing extensions.

Overlap programming flexibility shall permit the user to assign the timed overlap to follow any parent phase(s).

8.3.2 Multi-Overlap Operation

The controller unit shall be capable of eight overlaps including the standard four and assigning four phase outputs as overlaps. If a phase output is assigned as an overlap then it shall function as a standard overlap and programmed in the EEPROM. Changing these overlap assignments shall be programmed from the keyboard of the controller unit and provide warning of the impending sequence change.

8.4 RECALL FUNCTIONS

The controller unit shall provide the following programmable features for each phase.

a. Locking/Non-locking detector memory
b. Vehicle recall

c. Pedestrian recall
d. Maximum recall
e. Soft recall - Locking/Non-locking memory

Soft recall shall return the controller unit to the programmed phases in the absence of all other calls.

8.5 INITIALIZATION

The controller unit shall permit power start and external start to be individually programmed by phase and interval. Start intervals shall be green, yellow, red, all red or flash. During a power start condition, the controller unit shall be programmable for a timed display of an all red or flash interval before the selected start phase(s) and intervals are displayed. Data reference shall be made to the data in the EEPROM. An error shall keep the controller non-operational until the error is corrected. Resets shall be initiated to correct data integrity and begin the controller operating.

8.6 ADDITIONAL FEATURES

8.6.1 Last Car Passage

The controller unit shall provide guaranteed passage operation on a per phase basis. When selected, this feature shall provide a full passage (vehicle extension) interval when a phase gaps out with a gap in effect less than the passage time. The phase shall terminate after the passage interval expires.

8.6.2 Dual Entry

The controller unit shall provide both single and dual entry operation. When selected, dual entry shall cause the controller unit to insure that one program selected phase is timing in each ring. If calls do not exist in a ring when a barrier is crossed, the controller shall select a programmed compatible phase and operate it concurrently with the phase or phases that have calls. When the selected controller sequence is non-NEMA, then an acceptable method of calling a compatible phase is the use of vehicle detector switching.

8.6.3 Conditional Service

The controller unit shall provide a programmable conditional service feature when the controller is operated in the standard NEMA sequence. When selected, the controller unit shall service only one odd numbered phase during a sequence, once normal service to that phase has been completed and enough time for additional service exists on the concurrent even phase. The odd phase (left turn) shall be serviced if the vehicle clearance time of the terminating even phase plus a conditional service minimum green is less than or equal to the time remaining on the maximum green timer of the even phase which is still timing.

A conditional service, minimum green time shall be programmable for each phase. This interval shall insure a minimum green if the phase is conditionally served.

The controller shall be programmable to re-service the even phase after conditionally serving an odd phase following the same guidelines stated above. Once an even phase has been conditionally re-serviced, the odd phase shall not be conditionally served again until returning to the concurrent group that is timing.

8.6.4 Pedestrian Functions

The controller unit shall provide the following additional pedestrian functions:

a. Actuated phase rest in walk
b. Pedestrian clearance protection during manual control
c. Exclusive pedestrian occurring once at a programmable point within each of the previously required sequences.

8.6.5 Backup Protection

Programming shall be provided to inhibit re-service of odd phases within the same concurrent group. When programmed, backup protection shall take priority before conditional service.

8.6.6 Simultaneous Gap Termination

The controller unit shall provide a programmable simultaneous gap termination feature. When programmed, phases in both rings must gap out together in order to terminate the green interval and cross the barrier.

9.0 DETECTOR INPUT FUNCTIONS

9.1 DESIGN REQUIREMENTS

The controller unit shall provide a minimum of sixteen vehicle detector inputs. Each input shall be assignable to any single phase or group of phases and be programmable for type of function (detector switching).

Detectors 1 through 8 shall meet the NEMA standards for vehicle detector inputs into phases 1 through 8. Remaining detectors shall utilize inputs assigned to the auxiliary functions in the D connector as specified in the appendix.

9.2 DETECTOR INPUT PROGRAMMING

All vehicle detector input shall be user-programmable for vehicle calls to any or all of the eight phases in the controller. Each shall be selected for multiple applications identified in the following descriptions in addition to the vehicle call inputs. The controller shall include a minimum of three programming plans selected by TOD or cycle/split/offset for assignment of the programmable feature of each detector input.

9.2.1 Standard Detector Input

All inputs shall default to standard operation, providing one call per actuation and shall be assigned to each phase, (i.e. det 1 to phase 1, det 2 to phase 2, etc.).

9.2.2 Delay and Extend Detector Input Timing

A minimum of sixty-four detector inputs shall be programmable to delay a vehicle call to the assigned phase(s). The delay timer shall have a range from 0 to 25.5 seconds. The timing shall begin upon activation of the input to the controller. If the input remains when the time has expired then the input shall be directed to the phase(s). The timing shall be reset when the input is removed. The delay timing function shall be inhibited during the selected phase green interval.

A minimum of sixty-four detector inputs shall be programmable for extending the vehicle call to the assigned phase. The extend timer shall have a range from 0 to 25.5 seconds. The extending time shall begin upon removal of the input to the controller and will extend the call to the phase until the expiration of the programmed time.

9.2.3 Phase Extending Detector Input

All inputs shall be programmable to extend assigned phase or phases green interval timing and once programmed this input will not call the phase for service. All input shall be programmable to switch assigned phases during a programmed red interval and begin extending the assigned phase green interval.

9.2.4 Call Detector Programming

All inputs shall be programmable to call assigned phase or phases during its red interval and not extend the green time from any actuation.

10.0 PREEMPTION

The controller unit shall provide a minimum of five priority/non-priority preemption sequences. This capability shall be a standard controller unit feature and shall be provided within the modules and software. All required features specified above shall be available and programmable within the preemption operation.

10.1 PRIORITY/NON-PRIORITY PREEMPTOR DESIGN REQUIREMENTS

Each of the five priority/non-priority preemptor shall be capable of railroad, fire lane, or emergency vehicle preemption sequences. Any one of the following conditions shall be selected to occur during preemption.

a. Hold phase green
b. Limited phase service, following track clearance

c. All red
d. Flash

10.1.1 Preemptor Call Priority

Preemptor shall be selected as priority or non-priority. Lowest numbered priority preemptor shall have highest priority and will override a higher numbered priority preemptor calls. A minimum of two preemption phases shall be give equal priority and override higher numbered preempts. Additionally, priority preemptor calls shall override all non-priority preemptor calls. Non-priority preemptor calls shall be serviced in the order received.

10.1.2 Preemptor Call Memory

Each preemptor shall provide a programmable locking memory feature for preemptor calls. The preemptor in the non-locking mode shall not service a call when it is received and dropped during the delay time.

10.2 PRIORITY/NON-PRIORITY PREEMPTOR TIMING

The following preemptor timing features shall be provided for each of the priority/non-priority preemptor inputs.

10.2.1 Preemptor Timing Intervals

All preemptor timing intervals shall be programmable from 0-60 minutes in 1 minute increments, 0-255 seconds in 1-second increments or 0-25.5 seconds in 0.1-second increments as indicated for each of the following.

10.2.2 Delay Time

The delay time interval shall inhibit the start of the preemption sequence for a specified duration. This interval shall begin timing immediately after receiving a preemption call. (0-255 sec., 1 sec increments)

10.2.3 Duration Time

Each preemptor shall provide a programmable minimum and maximum duration time that a preemptor shall be active, (Min: 0-255 sec., 1 sec. increments, Max: 0-60 mins, 1 min. increments).

10.2.4 Minimum Times

Phase timing at the beginning of a preemption sequence shall be controlled by the programmable minimum times before advancing to the next sequential interval. Preemptor minimum times shall be programmable for the following intervals:

a. Green/Pedestrian Clearance (0-255 sec., 1 sec. increments)
b. Yellow (3-25.5 sec, 0.1 sec. increments)
c. Red (0-25.5 sec. 0.1 sec. increments)

10.2.5 Pedestrian Timing

If a phase is timing a walk interval at the beginning of a preemption sequence, then the phase shall advance immediately to the preemption pedestrian clearance. A selectable timing interval shall be provided to time the minimum pedestrian clearance through the vehicular yellow interval, or alternately advance immediately to vehicular yellow.

During preemption, pedestrian indicators shall be user selected to be solid don't walk, blank, or operational during preemption.

10.2.6 Overlap Timing

Overlaps shall be programmed to operate with the phase(s) or to clear to red then remain red during preemption. Overlaps terminating or forced to terminate when a preemption sequence begins, shall be selectable to time the preemptor minimum yellow and red clearance times or to time programmed overlap timing specified in section 8.3.

10.2.7 Track Clearance

Each preemptor sequence shall provide user-programmable green, yellow and red track clearance intervals. Track clearance shall begin timing immediately after the preemptor minimum red interval, (section 10.2.4).

A minimum of two phases shall be selected as track clearance phases. During the track clearance period, the selected phases shall time the track clearance green, yellow and red intervals once, and then advance to the next programmed interval (section 10.2.8).

If track clearance phases are not selected, the track clearance intervals shall be omitted from the preemption sequence.

10.2.8 Limited Sequence

The limited sequence program shall be user selected and begin immediately after track clearance. It shall remain in effect until preemptor duration time, phase minimum times has elapsed, or preemptor call has been removed.

10.2.9 Limited Sequence Phases

Any active phase, except a track clearance phase(s), shall be selected for operating during limited sequence operation. Those phases not selected shall remain red during preemption. The controller unit shall remain in all red interval during the limited sequence interval when no phases are selected for operation during limited sequence.

If flash is selected for the limited sequence interval, up to two permissive phases shall be selected to flash yellow. The remaining phases shall flash red. Overlaps associated with the phases flashing yellow shall also flash yellow unless they have been forced to terminate in which case they shall remain dark. Flashing shall occur by controlling the appropriate load switch driver outputs.

10.2.10 Limited Sequence Timing

During the limited sequence interval, the selected phase(s) shall operate normally (as outside of preemption). When preemption is exited, the current phase shall terminate after minimum green time is expired.

If any limited sequence intervals are programmed with zero timing, the equivalent interval time of the controller unit shall be used.

10.2.11 Exit Phases

Two permissive exit phases shall be selected to time after the preemption sequence has been completed. These phases shall serve as transition phases to return the controller unit to normal operation. Exit phases shall time their normal programmed interval times.

Additionally, it shall be possible to program exit calls on any of the phases used in normal operation. Phases programmed as exit phases shall be served first, while exit calls on the remaining phases shall be served in normal sequence.

10.3 PREEMPTOR ACTIVE OUTPUT

A preemptor active output shall be provided for the five priority/non-priority preemptor. The output shall be set to ON when the preemption sequence begins and shall remain ON for the duration of the sequence.

10.4 POWER INTERRUPTION

If a preemptor call is active when power is restored to a controller unit, the voltage monitor output shall be set to FALSE, placing the intersection into the flashing mode of operation. Additionally, if external start is applied during a preemption sequence, the intersection shall be placed into the flashing mode of operation. The flashing mode of operation shall remain in effect until the preemptor call has

been removed or the preemptor maximum duration time has elapsed. The controller shall begin operating as described by NEMA during power interruption.

10.5 PREEMPTOR STOP TIME

A stop time input shall stop the timing of the current active preemptor. The stop time input shall normally be controlled by the conflict monitor unit.

11.0 AUTOMATIC FLASH

The controller unit shall provide automatic flash selection per the requirements of the Manual on Uniform Traffic Control Devices. The flash phases shall be programmable through the keyboard and flashing shall be controlled by changing the controller outputs to the load cells from the normal sequencing of three outputs to a flashing output to one selected output. The controller shall be programmable for selecting the indication which will flash. Automatic flash shall be selected by external input, system command, or time-of-day from the internal time base clock. Two flashing controls shall be provided that alternate and shall be program selected for assignment as needed to each phase that will prevent a yellow/yellow conflict.

12.0 CONFLICT MONITOR

The conflict monitor shall conform to NEMA TS-1, SECTION 6, in addition to the requirements of this specification. A six or twelve channel monitor shall be provided with the controller as required on the order or plans.

Each conflict monitor shall utilize and be provided with a programming card specified in the above mentioned NEMA standards.

12.1 MECHANICAL DESIGN

The frame shall be completely enclosed within sheet aluminum housing with a durable protective finish. The housing shall be removable for service to the internal circuitry.

The programming card shall be inserted through the front panel of the conflict monitor. Card guides should be provided for aligning the edge connector of the card with the mating jack. The cards shall be removable without use of tools or disassembling of the housing.

All printed circuit boards shall meet, as a minimum, the requirements of the NEMA Standard. In addition, they shall also meet the following requirements:

a. All plated-through holes and circuit traces shall be plated with solder to protect exposed copper. Any wire jumpers included on circuit boards shall be placed in plated-through-holes that are specifically designed to contain them. Circuit track corrections by track cuts and jumpers that are tack soldered to circuit tracks are not acceptable.

b. Both sides of the printed circuit board shall be covered with a solder mask material.
c. The circuit reference designation for all components shall be clearly marked adjacent to the component. Pin 1 for all integrated circuit packages shall be designated on all printed circuit boards.
d. All electrical mating surfaces shall be gold-flashed.
e. All ICs 14 pin and up shall be installed in machine tooled grade sockets meeting these requirements. All sockets shall be AUGAT-8XX-AG11D or approved equal, meet UL specification 94V-0, be constructed with two-piece, machined contacts and close-ended to eliminate solder wicking. The outer sleeve shall be brass with tin or gold plating and tapered to allow easy IC insertion. The inner contact shall be beryllium copper sub-plated with nickel and plated with gold.

12.2 ELECTRICAL DESIGN

Liquid crystal displays shall be provided for displaying load cell outputs during normal operation, operations selected from a menu, and fault sensed. When a fault is detected, the display shall present two displays, sequentially, one showing all load cell outputs at the time of the fault detection, and one showing the specific fault and date/time detected.

Circuitry shall be provided to detect sequential failure and indicate the channel on which the failure occurred. This feature shall be programmable to select either enable or disable for each channel. The following shall be failure indicated as sequential failures:

a. Yellow indication on for less than 2.5 seconds.
b. No yellow indication after green.
c. Simultaneous display of two or more indications within the same signal head, except as allowed by the MUTCD.
d. Combinations of any above.

All solid state components shall be mounted on printed circuit boards. The electronic components and printed circuit board(s) shall comply with the requirements outlined for the controller in section 7.10 of this standard.

The conflict monitor shall be capable of recording and holding in memory (logs) the last ten conflicts detected and the last ten power failures. The time and date shall be indicated for each conflict and power failure. The memory shall be non-volatile during power loss and meet the requirements for the controller in section 7.3, excluding Section 7.3.1. A log of the sequence of 20 events prior to a fault detection shall be retrievable prior to resetting the monitor and accessible through the communication port.

Each conflict monitor will be supplied with a 4-foot RS-232 cable with male connectors on each end. The monitor shall have a 9 pin communication port on the front of the monitor. The communication port shall be as defined herein, compatible with EIA-RS-232 standards for connection to a portable computer, printer, or other electronic devices. Communications shall be full or half duplex using FSK transmissions. The data transmission rate shall be selected baud. Control of the port shall be selected in

menu form on the monitor display or request through the communication port. Data transfer to other electronic devices shall be provided with download commands from the device.

The monitor display shall present a selection menu for various data and programs available. This shall include, but not limited to, date and time set, review of programmed permissive phases, various logs, and other operational.

12.3 COMMUNICATIONS

The conflict monitor shall generate a report to the controller each time a change in status occurs. The report shall include the following as a minimum:

a) The configuration of the programming card.
b) The channels which have the NEMA plus features enabled.
c) A listing of the phases which are monitored for short yellow times.

Additionally, the conflict monitor shall store and report at least five (5) failures containing the information listed above when interrogated directly via the portable download/upload unit.

The report shall list at least the last five (5) failures from the monitor which contain the following:

a) Time of the occurrence of the failure.
b) The channels (Green, Yellow, Red and Walk) that were active at the time of the failures.
c) The status of the CVM input and the +24 V 1 and 2 inputs.
d) The type of failure (conflict, switch failure, red failure, etc.)

The conflict monitor will be capable of transmitting (via RS-232 port) an ASCII report to the controller unit.

The conflict monitor shall provide three (3) reports for interrogation. The first is an ASCII record of all data entries and programming card configurations. The second is an ASCII formatted record of all failures and each power on/off cycle. The last ten of these failure records will be available in report form. The third report will be a sampling report and will contain the twenty (20) samples of all of the inputs to the conflict monitor. Each sample will be taken at 0.1 second intervals so that the last two (2) seconds of real-time outputs of the load switches can be viewed.

Each of the reports will have the appropriate headings and will consist of ASCII lines of not greater than eighty (80) characters so that a clear presentation of the data can be viewed from the screen of a notebook computer using the standard ASCII character codes.

The monitor port shall be programmed in the following format:

a) Standard EIA-232 convention
b) Each word shall be eleven (11) bits long: eight (8) data bits, one (1) start bit, one (1) stop bit, no parity.
c) 2400 to 9600 baud

d) The note book or traffic controller unit will send a message of one byte to the monitor requesting each of the reports. After the one-byte message, the controller will issue an XON command to start the data flow. The data flow can be stopped with an XOFF command at any time.

The data sent to the notebook or controller unit in response to the request message will be the ASCII report requested. The last byte sent by the monitor will be an EOT (End Of Text- 04H).

If the controller issues an XOFF during a reporting request, the monitor will stop the data flow. If an XON is not issued within 30 seconds, the monitor will time out and set its pointer to the beginning of the report. The next XON will then start at the beginning of the requested report. A report will also perform the XOFF function to the conflict monitor.

Definitions of the requests are as follows:

Request report 1: 31H
Request report 2: 32H
Request report 3: 33H
XON (DC1): 11H
XOFF (DC3): 13H

13.0 SOLID STATE SIGNAL LOAD CELLS

The load cells shall follow those standards previously set forth. In addition to those, each load cell shall have indicators on the front showing the input state of operation with the indicators vertically aligned and the red input on top, yellow in the middle, and green below.

14.0 SIGNAL FLASH TRANSFER RELAY

The transfer relays shall be electro-mechanical and shall be energized during normal sequential operation of the traffic signals with the operational switch in the normal position. This relay shall be de-energized when the indications are to be flashing. The relay shall transfer the field signal circuits to the flashing circuits and energize the flasher.

14.1 PHYSICAL DESIGN

The relay shall be enclosed in a transparent case for protection against dust, dirt and other foreign objects. The case shall be a maximum of 2.671 inches high, 2.375 inches wide and 1.75 inches deep. The insulated base shall extend 0.625 inch from the case and shall be 1.990 inches wide and 1.120 inches deep. The contacts of the plug shall be flat blades arranged in two (2) parallel rows, 0.475 inch apart with the flat side of the blades in line with the row. The contacts of the plug shall be 0.250 inch wide, 0.060 inch thick, and extend past the insulated base 0.520 inch. Each row shall have four (4) contacts. The base shall be keyed with a pin that has a diameter of 0.156 inch and extend past the insulated base 0.685 inch. The pin shall be centered between the row of contacts and centered in line with contacts 5 and 6 of the plug. The contacts of the plug shall be numbered for wiring purposes, from 1 through 8. The top row shall be consecutively numbered from left to right using the odd numbers and the bottom row shall be consecutively numbered from left to right using even numbers.

14.2 ELECTRICAL DESIGN

The relay coil shall be rigidly supported by the insulated base. The contacts shall be 2 Form C, rated at 20 Amps, and shall be 3/8 inch diameter, silver cadmium-oxide. The relay's life shall be 5 million mechanical operations and 100,000 electrical operations. Each contact shall be rated for power bus control and 1 KW tungsten at 120 VAC. The coil shall be 110 VAC and shall pick up at 80% of nominal voltage. Maximum power requirement of the coil shall be 10 VA. The relay shall be wired and the socket pin assignments arranged according to the following table:

PIN	FUNCTION	PIN	FUNCTION
1	Relay Coil	5	Common Circuit #1
2	Relay Coil	6	Common Circuit #2
3	NC Circuit #1	7	NO Circuit #1
4	NC Circuit #2	8	NO Circuit #2

TABLE 18A-5
TRANSFER RELAY WIRING

The base, relay, and enclosure shall have a minimum rating of 1500 volts.

15.0 **SOLID STATE FLASHER**

The flasher shall comply with NEMA TS-1, Section 8 and Section 7.2.3.2. The flasher shall be a two circuit flasher rated at 15 amps per circuit. (Type 3)

16.0 VEHICLE AND PEDESTRIAN DETECTORS

Vehicle detectors shall be fully digital, microprocessor designed, auto-tune, card rack mounted and have four channels of detection per card, type 8. Unless otherwise noted the detectors shall be provided with the order for controller in type 3, 5, 6, and 7 cabinets. Detector units shall conform to applicable environmental, functional, dimensional, and design required in NEMA TS 1, Section 15. The amplifier shall not consume more than 385 ma of current at the rated voltage. Delay and extension timings shall meet this standard when the order or plans require the detector to have such timing. Each channel shall have an erasable, write-on surface for channel identification.

Pedestrian detectors shall be of an approved model accepted by the Department under the appropriate Traffic Control Standard. Each order or plans shall identify the type and quantity of detectors in each cabinet.

16.1 SENSITIVITY AND ACCURACY

Detector units shall conform to NEMA TS1, Section 15. Each detector shall be accurate for detecting all vehicles from motorcycles to tractor-trailer combinations which ordinarily travel public streets and highways and are comprised of sufficient conductive material, suitably located to permit recognition and response by the detector system. There shall be a minimum of sixteen selected sensitivity ranges located on the front of the unit for each channel. The range of sensitivity shall be, nominally, between 0.00 % - 1.250% change in total loop inductance.

16.2 OPERATING MODES

Each channel shall be self-tuning in accordance with the NEMA standards. Response time for compensation from extended detection, re-tuning to track the changing electrical characteristics of the loop and recovery from power interruption shall be accomplished within 50 milliseconds. Each channel shall have a on and off switch. Each detector card shall have a momentary push switch to reset all channels.

16.3 FAIL SAFE

The detector shall operate when sensor loop shorted to ground or not in good condition. The unit shall generate a continuous call when re-tuning failed sensor loop or failed detector unit.

16.4 CONTROL VOLTAGE

All controls shall be DC voltage in accordance with the NEMA standards. The control circuit from the delay/extension feature shall follow this requirement.

16.5 CONTROL SWITCHES

All switches, connectors, and fuses shall be located on the front of the card. Each switch shall be permanently labeled to identify its function. Each position shall be labeled to identify its mode of operation. Each mode of operation shall be simple to program with one switch position assigned to one function.

16.6 PRINTED CIRCUIT BOARD DESIGN

The PC board shall be in accordance with NEMA TS1 Section 15. All pressure contracts shall be gold flashed. All components mounted and soldered to the PC board shall be easily removed and replaced without causing damage to the board or traces. Each individual PC board shall be identified by manufacturer and a serial number or part number clearly stamped or etched on the board. All PC boards shall be coated with an epoxy or approved equal type material to prevent erratic performance due to high humidity, condensation and growth of fungus and mildew. This coating will not cover the component on the board, but once the components are in place, they and the soldered joints shall be covered with a moisture and fungus proof, clear type of acrylic lacquer. This coating shall not be injurious to the board or components and shall not interfere with the repair of the circuitry or the replacement of components.

16.7 PEDESTRIAN DETECTOR ISOLATION

Two - two channel pedestrian isolation circuit boards shall be provided. There shall be two circuits using optical and transformer isolation designed and tested for a minimum of 2500 volts D.C. between the inputs and outputs. Each circuit shall recognize a minimum 5 millisecond switch closure between conductor pairs from the pedestrian push button operated on a maximum of 5 volts and 20 milliamps. Transient protection shall be on the input and shall withstand a 10 microfarad capacitor charged to 2,000 volts to be discharged between input pins or between input pin and chassis ground. When the input switch closure occurs, the circuitry shall close the pedestrian call circuit between the controller input and logic ground and remain closed for a minimum of 100 milliseconds or the time the pedestrian push button is closed, whichever is larger. Additional circuits shall be provided to maintain isolation, lock the pedestrian actuation, and reset when an input from the DC level from the controller activates the walk and raises the potential of the field circuit from five volts to 24 volts. Each board shall have a fused power supply. Output status indicators shall be located on the front panel for each channel. A three position switch shall be provided on the front of the unit for each input circuit and provide "on", "off", and momentary "on". Alternate designs will be reviewed at the time of bid for pedestrian actuation and annunciator located at the pedestrian push button.

The card shall fit into the vehicle detector card rack. The dimension characteristics shall follow the Type 7 card detectors standards Section 15 in NEMA TS1 1989.

16.8 PEDESTRIAN ISOLATION CARD CONNECTOR

The isolation card shall be designed with an edge connector. The connector shall be 22 position, dual inline type connector with the following position assignments:

PIN	FUNCTION	PIN	FUNCTION
2A/1	SPARE/CH 1 ∅WALK	N	AC(+) 120 V
B/2	SPARE/CH 2 ∅WALK	P	SPARE
C	SPARE	R	SPARE
D	INPUT #1	S	SPARE
E	INPUT COMMON	T	SPARE
F	OUTPUT #1 (COLLECTOR)	U	SPARE
H	OUTPUT #1 (EMITTER)	V	SPARE
J	INPUT #2	W	OUTPUT #2 (COLLECTOR)
K	INPUT COMMON	X	OUTPUT #2 (EMITTER)
L	CHASSIS GROUND	Y	SPARE
M	AC (-) 120 V	Z	SPARE

TABLE 18A-6
PEDESTRIAN ISOLATION CARD CONNECTOR ASSIGNMENT

16.9 CARD RACK

Card racks shall be designed with top and bottom card guides for four-four channel detector cards mentioned above, two-two channel isolation cards, and a power supply installed in type 6 cabinets and two-four channel detector cards mention above, two-two channel isolation cards, and a power supply in type 3 and 5 cabinets.

The housing shall be constructed of 5052 aluminum alloy of a minimum thickness 0.062 inch with a protective coating (painted or anodized). Removable covers shall be provided on top, bottom, and back allowing access to the internal hardware and circuitry. Each cover shall be easily removable with the use of conventional hand tools.

The dimension of the rack in type 3 and 5 cabinets shall be approximately 10 inches wide, 6 inches high and 9 inches deep and in type 6 cabinets shall be approximately 14 inches wide, 6 inches high and 9 inches deep. The rack shall be mounted on the inside of the door of type 3 cabinets as shown in drawing 18-A and attached to the bottom shelf in type 5 and 6 cabinets, hinged to swing out to provide access to the rear assembly without removing the shelf(s).

The card rack for type 3 cabinet shall be as above except: the top shall be rain proof with a drip edge to prevent water from running across the lower side of the top and into the rack and shall have a power

supply, two - four channel detector cards positions, and two - two channel isolation cards. These shall be wired as follows: first card detector to vehicle call input 1 through 4, second card detector to special detector inputs 1 through 4, first isolator card to pedestrian detector inputs phases 2 and 4, and second isolator to preemptions 1 and 2.

The power supply shall meet the dimensional requirement of a four channel card rack detector type 8, operate on 120 VAC, 60 Hz, and the AC + into the power supply shall be fused. The fuse shall be located on the supply card, permanently labeled indicating the fuse and size. The supply shall meet NEMA specifications and provide 24 VDC, 385 ma, regulated as specified in NEMA TS-2-1989, Section 15.2.6.2. A power indicator and a fuse shall be provided on the front of the supply for each output. A pull handle shall be on the front of the unit. The power supply shall be located on the left side of the rack when viewed from the front. DC voltage from the power supply shall not be supplied to the isolator positions.

The rack shall be wired with a separate power cord and individual wires to each card position. The power cord shall have each wire identified with a sleeve marked, DR-AC +, DR-AC-, and DR-Gr, and terminated with a spade terminal connected to the terminal for the controller power. Each module slot shall be wired directly to the card edge connector with color coded harness. The harness shall meet the requirements for wiring elsewhere in this standard. Each detector lead in from the field wiring shall be a twisted pair. A sufficient amount of slack in the wiring harness shall allow the rack to be moved for visual inspection and mechanical repairs. The wiring shall be cabled together into a harness, attached to the back right side (viewed from the front) with an approved cable clamp, and routed to the back and detector panel.

The cards in the rack shall be numbered from left to right viewed from the front in order to identify the position function. For type 6 cabinets the first position will be the power supply; the second, a four channel detector for phases 1, 2, 3, and 4; the third, a four channel detector for phases 5, 6, 7, and 8; the fourth, a four channel detector for special detectors 1, 2, 3, and 4; the fifth, a four channel detector for special detectors 5, 6, 7, and 8 ; and the sixth and seventh, each a two channel isolation card for pedestrian detection to phase 2, 4, 6, and 8 respectively. For type 3 and 5 cabinets the first position will be the power supply; the second, a four channel detector for phases 1, 2, 3, and 4; the third position, a four channel detector for special detectors 1, 2, 3, and 4; the fourth and fifth position each a two channel isolation card for pedestrian detection to phase 2 and 4, and preemption input to 1 and 2.

Wiring from each detector and isolator output shall be directly to and terminated to the front of the back panel at their associated terminals of the controller. The control circuit wiring for each detector and isolator input shall be made directly from the associated terminals of the controller. The wiring for the field input to the card rack shall be terminated with the associated terminal on the detector panel. Each wire from the card rack to the back panel shall be terminated using a spade type compression terminal and an identification sleeve identifying each as follows: Detector position one, VD-1-1, VD-1-2, VD-1-3, and VD-1-4; the input to these card positions shall be identified as: VD-1-1G, VD-1-2G, VD-1-3G, and VD-1-4G. The remainder of the detector wiring shall be identified in a similar manner. The pedestrian detector isolator cards outputs shall be identified as: Isolator position nine: PD-1-1 and PD-1-2, the inputs: PD-1-1W and PD-1-2W. The other isolator shall be identified similarly using PD-2-,etc.

17.0 MECHANICAL CONSTRUCTION OF ENCLOSURES

The cabinet shall be constructed of sheet or cast aluminum alloy.

17.1 SHEET ALUMINUM

The sheet aluminum alloy shall be ASTM No. 5052-H32 or equivalent, and shall have a minimum sheet material thickness of approximately 1/8 inch.

17.2 CAST ALUMINUM

The cast aluminum alloy shall be ASTM No. 356-75 or equivalent. Flat cast surfaces exceeding 12 inches in both directions shall be a minimum of 1/4 inch (0.25 inches) in thickness. Flat cast surfaces not exceeding 12 inches in both dimensions shall be a minimum 3/16 inch (0.1875 inches) in thickness.

17.3 OUTLINE DIMENSIONS

Outline dimensions shall be as shown in Table 18A-7. All dimensions are outside of cabinet and in inches exclusive of hinges, handles, overhang(s), vent housing and adapters. Cabinet heights are measured to the lowest point of the top surface of the cabinet. The combined overhangs of the top of the cabinet shall not exceed four inches. Type 4 cabinets will be a combination of an empty type 2 cabinet or a meter base cabinet on bottom and a type 2 or 3 cabinet on top.

CABINET TYPE	WIDTH	HEIGHT	DEPTH
2	22 (-0 + 15%)	***45 (-0 + 10%)***	15 (-0 + 15%)
3	22 (-0 + 15%)	***45 (-0 + 10%)***	15 (-0 + 15%)
4	22 (-0 + 15%)	60 (-0 + 20%)	15 (-0 + 15%)
5	30 (-0 + 10%)	46 (-0 + 18%)	16 (-0 + 15%)
6	38 (-0 + 10%)	52 (-0 + 15%)	24 (-0 + 15%)
7	38 (-0 + 10%)	72 (-0 + 15%)	24 (-0 + 15%)

TABLE 18A-7
CABINET DIMENSIONS

17.4 FINISH AND SURFACE PREPARATION

17.4.1 Painted Aluminum Cabinets (When specified)

The color shall be medium green, OAAA #144. The surfaces of the cabinet shall be suitably prepared prior to priming. Unpainted interior surfaces shall be permissible in aluminum cabinets. Exterior surfaces shall be primed and painted to provide a durable exterior finish. If the primed surfaces are scratched or damaged, the affected area shall be re-primed prior to painting.

17.4.2 Unpainted Aluminum Cabinets (Shall be provided unless otherwise noted).

Unpainted aluminum cabinets shall be fabricated from mill finished material and shall be cleaned with appropriate methods that will remove oil film, weld black, mill ink marks and render the surface clean, bright, smooth and non-sticky to the touch.

17.5 SHELVES

Cabinets shall be provided with a minimum of one shelf in type 2 and 3, two shelves in type 5 and 6, and three shelves for type 7 to support control equipment. Type 2 and 3 cabinets shall have provisions for positioning the shelf between 10 inches from the bottom and within 8 inches from the top. Type 5, 6, and 7 cabinets shall have provisions for positioning shelves between 24 inches of the bottom of the cabinet and to within 8 inches of the top of the cabinet in increments of not more than 2 inches. The adjustment of the shelves shall be accomplished by using small hand tools. Rivets are not acceptable. All shelves shall have a raised back edge to stop equipment from passing the back edge of the shelf. This edge shall be a minimum of 1/2 inch from the rear wall of the cabinet and be constructed from one continuous piece of metal.

All cabinets shall have a 1 ½ inch drawer, mounted directly beneath the lowest shelf. This drawer shall have a hinged top cover and shall be capable of storing documents and miscellaneous equipment. The drawer shall open and close smoothly. Drawer dimensions shall make maximum use of the available depth offered by the cabinet and controller shelf, and shall have approximately the same width as the corresponding back panel. The bottom of the drawer shall have drain holes sufficient to drain any amount of accumulated water in the drawer.

17.6 TOP SURFACE CONSTRUCTION

Cabinets shall be manufactured to prevent the accumulation of water on its top surface and slope in a manner to drain water to the back side of the cabinet. The highest point of the top surface shall be limited to a maximum of six (6) inches added to the overall height of the cabinet.

17.7 DOORS

17.7.1 Main Cabinet Door

Cabinets shall have a single hinged main door which permits access to all equipment within the cabinet and visual inspection of all indicators and controls. Unless otherwise specified, the door shall be hinged on the right side of the cabinet as viewed from the outside facing the cabinet door opening. Type four (4) cabinets shall have two main doors equally dividing the height of the cabinet front with clearances at top, middle, and bottom.

17.7.2 Hinges

All cabinet doors shall incorporate suitable hinges utilizing stainless steel hinge pins. Hinges shall be protected to prevent being removed or dismantled when cabinet door is closed. Attachment to the cabinet shall produce a smooth finish, protruding fasteners are not acceptable.

17.7.3 Door Stop

Each cabinet shall be provided with a door stop which holds the door open at positions of 90° ±10° and 170° ±10°. A means shall be provided to minimize accidental release of the door stop. Type seven (7) cabinets shall have the door stop located at the bottom of the door and all other cabinets shall have the stop located at the top of the door.

17.7.4 Locking Mechanism

All cabinets shall incorporate a main door lock constructed of nonferrous or stainless steel materials, which shall operate with a traffic industry conventional #2 key. A minimum of one key shall be included with each main cabinet door lock.

A three - point lock on the strike edge of the door shall be provided with all types of cabinets except when specified to be different on the order or plans. The three (3) points of the lock shall be located at the top, bottom, and middle of the strike edge of the door.

The lock shall prevent operation of the mechanism when in the locked position.

The door handle shall rotate inward from the locked position so that the handle does not extend beyond the perimeter of the door at any time. The operation of the handle shall not interfere with the key, police door or any other cabinet mechanism or projection. The handle shall have the mechanical strength to operate the mechanism and shall be made from non-corrosive material.

Cabinets with three point lock shall be provided with a means of externally padlocking the mechanism. A minimum 3/8 inch diameter lock shackle shall be accommodated. The lock shaft shall be 5/8 inches in diameter.

17.7.5 Door Opening

The main door opening of all cabinets shall open on and be centered within the front side having the width dimensions listed in the previous table and shall be at least 69% of the area of the side. Necessary clearances shall be provided allowing unrestricted movement of the door from closed position to open position. The door shall seal against a minimum of one inch wide neoprene sponge gasket with tight seams. The top gasket shall be the width of the door, the side gaskets shall begin below the top gasket and the bottom gasket shall be within the side gaskets. A gasket retaining ring shall be installed on the inside of the gasket.

17.7.6 Police Compartment

A hinged police compartment door shall be mounted on the outside of the main cabinet door. The door shall permit access to a police panel compartment for operation of switches defined elsewhere in these standards. The compartment shall be constructed to restrict access to exposed electrical terminals or other equipment within the cabinet. The door shall seal against a neoprene sponge gasket in the same manner as stated above for the main door.

Space shall be allowed for the switch controls and storing of the manual control cord in the police panel compartment with the door closed. The minimum internal dimensions shall be 3-1/2 inches high, 6-3/4 inches wide and 2 inches deep. Additionally, the volume shall be not less than seventy (70) cubic inches.

Police doors shall be equipped with a lock which can be operated by a police key, Corbin Type Blank 04266, or equivalent. A minimum of one key shall be included for the police compartment of each cabinet.

The police compartment shall be located above the bottom of the main door as shown in the following table:

CABINET TYPE	LOCATION
2 and 3	2.5" ±10% from bottom and left of center, see Drawing #18A
5	30" ±10%
6 and 7	39" ±10%

TABLE 18A-8
POLICE COMPARTMENT LOCATION

17.8 CABINET MOUNTING

17.8.1 Pole Mounted Cabinets Type 2 and 3

The cabinets shall be provided with provisions to attach a pole bracket to a reinforcement plate permanently mounted to the back, top, and center of the cabinet. The reinforcement to the cabinet shall be designed to support the weight of the cabinet and the equipment intended to be contained within and the structural loads referred to in this specification. The minimum width of the adapter shall be six (6) inches wide and three (3) inches high, tolerance of both -0 inch, +6 inches. Two 3/8 inch holes shall be drilled through the cabinet, within the reinforced area, two inches from center line of the width of the cabinet. Countersink each hole on the outside of the cabinet for flat head screws. Install two 5/16" flathead screws in the mounting holes with the top of the screw heads to be flush with the surface of the cabinet wall.

The cabinet shall be pre-drilled for two (2), 3" wire entrance holes, one in the top and one in the bottom, both at the back edge and centered on the width of the cabinet and one (1) 2" entrance hole adjacent to the three inch hole on the bottom as shown in the attached drawing. Three hubs shall be provided with type 2 and 3 cabinets. The hubs shall centered on the entrance holes and attached to the cabinet using four (4) 5/16 inch-18-tpi by 1-1/2 inch long hex head bolts, with lock washers and hex nuts. The hubs and cabinet shall be pre-drilled for mounting the hubs to the cabinet with the above mentioned bolts using a bolt pattern of 2-1/8 inches centered on a line perpendicular to the back of the cabinet, by 3-3/4 inches parallel to the back of the cabinet. The centers of the bolt pattern on the hub and the wire entrance hole shall coincide. The location of the hubs shall allow minimum clearance for box end wrenches to fit onto the nuts within the cabinet.

17.8.2 Pedestal mounted cabinets Type 2 or 3

When specified on the order or plans the requirement for a pedestal mounted cabinet shall meet the following requirements. The specified cabinet shall be provided and equipped with a reinforced bottom, 1/4" aluminum plate, and a slip fit adapter for attachment to a standard four inch inside diameter pipe. The bottom of the cabinet shall be provided with an access hole for cable (min. 4 inches) and mounting holes for the adapter located in the center of the bottom. The adapter shall be bolted to the cabinet with 5/8" bolts and fitted on a 6-1/2" bolt circle. The attachment to the standard four inch pipe shall be secured with four square headed set screws. The holes drilled for pole mounting hardware and wiring shall be covered with gaskets and blank hubs.

17.8.3 Base mounted cabinet Type 4

The type 4 cabinet shall consist of two separate upper and lower cabinets. Both shall have doors specified above and shall be constructed without interference when opening or closing. A base adapter shall be provided for mounting the lower cabinet to the foundation specified in the signal plan detail sheets and within this standard. The order or plans will specify the type cabinet to be the top cabinet, type 2 or type 3. The drilled center hole specified for a pedestal mount shall be provided for wire-way between the cabinets. All other holes will be covered with a blank hub and gasket as specified above. A terminal panel shall be provided with the signal circuits, interconnect, communications, and power individually

terminated and labeled. When a type 3 cabinet is required, additional terminals shall be provided for the loop and pedestrian lead-in terminations.

The base adapter shall separate the lower cabinet from the foundation a minimum of 4" and a maximum of 6". The cabinet shall be sized to provide the correct dimension of the completely assembled unit to meet the dimension requirements stated above. The adapter shall be constructed for mounting on the foundation shown in Figure 18A-1. The complete unit shall be securely connected with removable fasteners and meet the requirements for security in this standard.

The interior anchor brackets shall transverse the cabinet. Each bracket shall attach to one edge adjacent to the bracket. The strength of the bracket shall prevent the cabinet from being lifted from the concrete base with a load of fifty pounds acting at the top, front or back of the cabinet. An alternate method of cabinet support can be a 1/4" aluminum reinforcement plate meeting the requirements shown in Figure 18A-1.

17.8.4 Base mounted cabinets Types 5, 6, and 7 (types as specified on order or plans)

The cabinet or its base adapter shall be so constructed that it can be mounted on the foundation shown in Figure 18A-2.

The interior anchor brackets shall transverse the cabinet. Each bracket shall attach to one edge adjacent to the bracket. The strength of the bracket shall prevent the cabinet from being lifted from the concrete base with a load of fifty pounds acting at the top, front or back of the cabinet.

17.8.5 Anchor bolts

Anchor bolts for base mounted cabinets shall be 3/4 inch diameter and 16 inches long. A 90° bend with a 2 inch leg on one end and a minimum of 3 inches with a UNC-10 thread shall be provided. Anchor bolts shall be steel with hot dipped galvanized finish. Each anchor bolt shall be furnished with one 3/4 inch UNC-10 HDG steel nut and one 3/4 inch HDG flat steel washer. Two anchor bolts shall be provided with each cabinet.

17.9 CABINET STRUCTURAL TESTS (mounting shall withstand the following:)

17.9.1 Hinges and Door

The hinge and door assembly shall be of sufficient strength to withstand a load of 30-pound-per-vertical-foot of door height. This load shall be applied vertically to the outer edge of the door when it is opened to the 90 degree position. There shall be no permanent deformation or impairment of the door, locking mechanism, or door seal function after the load is removed. A stiffener shall be installed the width and at mid height of the door. The door panel shall be flat after fabrication.

17.9.2 Door Stop

Both the door and door stop mechanisms shall be of sufficient strength to withstand a simulated wind load of 5 pounds per square foot of door area applied independently to the inside and outside surfaces without failure, permanent deformation, or any major movement of the door positions. For test purposes, a test load shall be applied to the vertical midpoint of the outer edge of the door at a right angle to the plane of the door. The test load shall equal one half of the calculated wind load. The force shall be applied first on the inside edge, then on the outside edge. These tests shall be performed with the door at 90° and 170° positions.

17.9.3 Lock

The door handle and associated cabinet locking mechanism shall withstand a torque of 100-foot lbs. applied in a plane parallel with the door to the handle in the locked position. The door handle and the external padlock mechanism shall meet the same requirement without the internal locking mechanism securing the handle.

17.9.4 Shelves and Drawer

Shelves shall support a load equivalent to 2 pounds per inch of length without deforming more than 1%. The test load shall be applied at two points, 6 inches to each side of the shelf's center, with the shelf installed in the cabinet. The drawer shall support up to 50 pounds in weight when fully extended.

17.10 EQUIPMENT PROTECTION

Cabinets are intended to provide protection for the housed equipment. Prying open or dismantling the doors, walls, or tops, shall be prevented with the cabinet securely closed.

When completely and properly installed, cabinets shall have provision for rain water drainage. The cabinet shall not permit water to enter the equipment cavity above any live part, insulation, or wiring.

17.11 RAIN TEST

All cabinets shall be designed to meet the requirements of the following tests. To insure realistic testing, the enclosure and enclosed equipment shall be mounted as intended for use.

A continuous water spray, using as many nozzles as required, shall be applied against the entire top and all exposed sides of the enclosure for 10 minutes at a minimum rate of 18 inches per hour of equivalent rain at an operating pressure of 4 to 5 pounds per square inch. The distance of the nozzles to the cabinet shall be a minimum of 36 inches and a maximum of 48 inches and located above the top edge of the cabinet.

The enclosure is considered to have met the requirement of this test if there is no significant accumulation of water within the enclosure and no water is visible on the live parts, insulation materials, or mechanism parts.

A rain test which is performed in accordance with Underwriters Laboratories, Inc., "Rain Tests of Electrical Equipment, Bulletin of Research #23, September, 1941", is considered to be equivalent to this test.

17.12 AUXILIARY EQUIPMENT

17.12.1 Fan and cooling system

All cabinets shall be equipped with a cooling system of sufficient capability to pass the test described in NEMA TS1-2.2.04. The fan shall be capable of operating continuously for a minimum of 6000 hours in a 122°F (50°C) environment without need for after-installation maintenance and deliver 100 CFM in free air. The fan shall be thermostatically controlled by switching the 120 VAC supply to the fan. The thermostat shall be field adjustable to switch on and off at any temperature between 70° and 160°F.

The exhaust shall be vented through the upper portion of the cabinet. All ventilation shall be rain-tight and shall prevent any water from dripping into the cabinet.

The cooling system shall be constructed to allow cleaning of the vents, screens and fan. Fasteners for removing panels to gain access to perform the above requirement of cleaning shall be removable with the use of simple hand tools, except as noted in Section 17.12.2.

An additional duplex receptacle (for use with communications modems) shall be mounted and wired in the upper left side of the cabinet assembly. This receptacle shall be wired on the load side of the 20 Amp circuit breaker.

17.12.2 Air Filter

The cabinet shall be equipped with a secured, replaceable filter for the incoming ventilation air. The air filter shall be removable without the use of tools. The filter size shall be: 7-1/2 inches high x 7 inches wide x 1 inch deep for the Type 2 and 3 cabinets, 10 inches high x 20 inches wide x 1 inch deep for the Type 5 cabinets, and 14 inches high x 25 inches wide x 1 inch deep for Type 6 and 7 cabinets. The filter shall have clearly indicated on it the size and direction of air flow. A metal grid shall be on both sides of the filter. The filter shall meet ASHRAE standard 52-76 for disposable, Type II, glass fiber air filters. The air resistance shall be 0.08 inch WC, measured on 24 inches x 24 inches sample at 300 FPM. The efficiency of the filter shall be a minimum of 75%.

17.12.3 Plan Holder (DELETED)

17.12.4 Cable Hanger (DELETED)

17.12.5 Cabinet Light

A fluorescent bulb and fixture shall be installed in cabinet types 2 and 3. The fixture shall be mounted against the cabinet top and the strike edge for the door. The fixture shall not extend beyond the strike edge at the top of the cabinet and shall not restrict the opening of the door. Mounting supports shall be on the front of the cabinet. The fixture shall have an on/off switch mounted on the side of the fixture. The fluorescent bulb shall be a ***F8T5WW***.

A fluorescent bulb and fixture shall be installed in cabinet Types 5, 6, and 7; and when specified in other cabinets. The fixture shall be within the upper 3 inches from the top and toward the door side of the cabinet. It shall illuminate the interior of the cabinet without hampering the vision of service personnel while inspecting the cabinet. The fluorescent bulb shall be a 15 watt, T-12, 18 inches in length. The fixture shall be of a sturdy construction to hold and operate the above mentioned bulb. For Types 5, 6, and 7, the cabinet light shall be turned on when the cabinet door is opened and turned off when the cabinet door is closed.

17.12.6 Cabinet Hubs

The hubs for the cabinets shall be cast aluminum, ASTM B-108 and those standard specifications referenced there in. The bolt pattern shall be as details in the drawings 18-A. The blank shall be a flat plate, 1/4 inch thick. All other hubs shall have a conduit threaded collar that shall be a minimum of 2 inches from the base of the hub. The threaded opening shall be centered within the 3-3/4 inches dimensions of the hub with outside edge of the threaded collar in line with the base of the hub. All hubs shall be provided with stainless steel bolts casted into the hub. The outside of the hub shall provide a smooth design that will shed water. On the hubs with larger threaded collar(s), the bolting pattern shall be maintained. The following table are the designations and type of hubs that will be specified on the order or plans.

TYPE	OPENING(S) SIZE	OPENING DESCRIPTION
Blank	-0-	no opening, flat plate, 1/4" minimum thickness
Single	3/4 in.	one opening, 3/4" conduit thread
Single	1 in.	one opening, 1" conduit thread
Single	1-1/2 in.	one opening, 1-1/2" conduit thread
Single	2 in.	one opening, 2" conduit thread
Single	2-1/2 in.	one opening, 2-1/2" conduit thread
Single	3 in.	one opening, 3" conduit thread
Double	3/4 in.	two openings, 3/4" each conduit thread

TYPE	OPENING(S) SIZE	OPENING DESCRIPTION
Double	1 in.	two openings, 1" each conduit thread

TABLE 18A-9
CABINET HUB DESCRIPTION

17.12.7 Clamp Pole Mounted Cabinet

A pole clamp shall be provided with the controller cabinet types number 2 and 3 for mounting the cabinet to the pole. The clamp shall be cast aluminum meeting the requirements for the cabinets and designed to hold the weight of the mentioned cabinets and the equipment contained within. The design shall provide four contact points with the pole and shall be adjustable for pole diameters from 10 inches to 12 inches. The clamp shall be divided into two parts, one half to be attached to the cabinet and the other half to be installed on the "back" side of the pole. The clamp shall have a slotted opening for coupling the clamp together using 5/8 inch galvanized all thread bolts and nuts. The clamp shall have a flat surface area, 4-1/2 inches x 2 inches minimum that attaches to the cabinet. Two 5/16 inch - 18 tpi, drilled and tapped holes spaced 4 inch center to center shall be centered within the flat area. The flat area shall space the back of the cabinet a minimum of two inches from the pole.

17.12.8 Adapter Pole Mounted Cabinet

When specified, an adapter shall be provided, excluding lag bolts or steel bands. The adapter shall be conformable for mounting to round poles with a 4-1/2 inches or larger diameter. Material for the adapter shall be comparable with aluminum alloy 6061 and have the mechanical strength to hold the weight and loading requirements for the cabinet. The adapter shall accommodate lag bolts up to ½ inch and steel banding up to 1 inch wide. The adapter shall have the same mounting bolt pattern and wire way requirement as the hubs stated in 17.12.6. The adapter shall be mounted to the cabinet using the same mounting bolts as the hubs, and additional gaskets shall be used between the cabinet, hub, and adapter.

17.12.9 Adapter Slip-fit Four Inch Pipe

The adapter shall slip-fit to a standard four inch pipe and shall secure to the pipe with four square headed set screws. The adapter shall be made of cast aluminum or steel designed to hold the weight of the cabinet and the loading characteristics required for the cabinet. The length of the adapter shall be approximately eight inches long. The adapter shall be attached to the cabinet with 5/8" bolts and fitted on a 6-1/2" bolt circle.

18.0 CABINET INTERIOR PANELS

18.1 GENERAL REQUIREMENTS

All panels shall be made from structural grade sheet aluminum equal to 2024 or 5052 aluminum alloy. Approval from the Department is needed if different material than listed above is used for the panels. The panels shall be attached to the cabinet walls with bolts, nuts, and washers specified elsewhere in this standard. Each panel shall be completely removable or capable of folding down from the cabinet wall without the need to remove any other panel or shelf so that inspections and repairs may be made behind each panel. All panels shall be grounded to the cabinet using a braided copper conductor equaling #6 AWG. All panels shall be sized to fit within the minimum dimension of the cabinet it is specified for as listed in Table 18A-7.

18.2 GENERAL WIRING DESIGN REQUIREMENTS

The inspection and repair of any panel shall not require disconnecting or removing wires. When multiple panels are required in the cabinet then the cable shall follow a single route and shall be from the detector/auxiliary panel to back panel to power panel to police panel. Cabling shall conform to the previously stated requirements for servicing each panel. Cable(s) shall be secured to the panels at the point where it leaves and/or enters each panel. The cable shall be secured to the cabinet wall with a cable clamp at two (2) points equally spaced between the panels on the above stated route. Wiring requirements for ventilation, temperature monitoring, and cabinet lighting shall be from the power panel to each device and shall be neat and in accordance with good wiring practices. A separate, parallel cable route shall be used from the field terminal to the back panel solid state load relay outputs.

18.3 IDENTIFICATION OF COMPONENTS, TERMINALS, AND CONNECTORS

Each terminal position, sockets, switches, filters, relays, and fuses shall be permanently labeled by painting, printing or engraving directly onto the panel or terminal strip identifying the position number and/or function of the terminal or device (paper labels of any type will not be accepted). Each harness shall be permanently labeled to identify function or connector with only the following:

HARNESS	LABEL	HARNESS	LABEL
NEMA Connector A	"A"	Conflict Monitor	"CMA"
NEMA Connector B	"B"	Conflict Monitor	"CMB"
NEMA Connector C	"C"	All Harnesses	Labeled with function
Controller Connector D	"D"	Additional harnesses may be identified later.	

TABLE 18A-10
HARNESS LABELS

18.4 IMPLEMENTATION OF EQUIPMENT CAPABILITIES

The wiring between the panels shall connect the functional inputs and outputs needed to implement the operational capabilities of the equipment and requirements of this standard. Input circuits to the controller for external controls shall not be wired: i.e.; hold, omit, force off, CNA I&II, control status bids, phase next, phase on, phase check, red omit, pedestrian recycle, max I&II, max inh. There shall be no discrete circuit, components or active devices attached to any panel or cabinet wall except as specified. Printed circuit boards are not allowed on any panel.

18.5 BACK PANEL

The back panel shall be located on the lower half of the back cabinet wall. The controller and conflict monitor harnesses shall be terminated on the upper portion and shall be secured to the top left corner of this panel with non-chafing cable clamps as described elsewhere in this standard. All wires shall be installed for the D and E connector functions listed in the appendix, between terminal positions and a receptacle on the back panel. The receptacles shall be square flange, with sockets connector, permanently mounted on the back panel, D receptacle - AMP206438-1, E receptacle - AMP2064038-1. The D connector on the harness shall be an AMP 206437-1 or an exact equivalent. A E harness connected to the Emergency Vehicle Detection System shall be provided with the EVDS equipment. The E connector on the harness shall be an AMP 206039-1 or an exact equivalent. The pins and sockets shall be gold finished. (Engineering note: EVDS equipment is specified in a separate document. All cabinets provided to DOTD shall be equipment to receive the EVDS equipment and provide the required functions as stated elsewhere in this standards.)

The wires from the controller harnesses, panel mounted receptacle, and other required devices shall be grouped by associated functions and terminated individually at a position on a terminal strip, (example - all inputs, by cycle, offset ... etc.). The terminal blocks and cabling for each harness shall be separate and have no wires crossing others from a different harness. Each terminal position shall be permanently identified with the associated function in the connecting equipment. Wiring to this panel from other equipment specified elsewhere in this specification shall be given extra lengths to allow movement between controller terminal positions for field changes.

All harnesses shall be five feet long from the point that is held by the cable clamp to the connector on the free end. The connector on the free end of the harnesses shall be a designated connector by the manufacturer. Any additional connectors and harnesses necessary to implement the controller and system operations specified herein shall be supplied by the manufacture meeting this standard.

For type 2 and 3 cabinets the panels shall be constructed in accordance with LA DOTD drawings #18A-1. The harnesses for type 2 and 3 cabinets shall be three feet long from the point that is held by the cable clamp to the connector free end.

18.5.1 Connectors

Controller and monitor harnesses shall utilize Mil-C-26482 Series 1 and AMP CPC type series 2 connectors. The controller harness connectors shall be as described elsewhere in this standard. The monitor harness connectors shall be as follows:

MONITOR Number of Channels	CONNECTOR
6	MS 3116F-22-55SY
12 Connector A	MS 3116F-22-55SZ
12 Connector B	MS 3116F-16-26S

TABLE 18A-11
MONITOR CONNECTORS

18.5.2 Harness Wire Termination

The monitor's signal input channels and voltage monitoring circuits shall be terminated on the appropriate terminals. The following shall be terminated at one position in all cabinets: harness wiring listed in NEMA-TS-1 Section 13 except as noted above, each input and output of the load cells, input and output of the controller, and the output of the flash transfer relays. The terminal blocks shall be either single row feed-through or double row type (electrical requirements described elsewhere in this standard). Exceptions to the requirement for single position termination for each wire are AC-, chassis ground, logic ground and flashing outputs. Listed below are the minimum terminals required for each:

a. Logic Ground - Three (3) adjacent positions
b. AC- - a separate copper or brass multi-terminal bus bar shall be mounted near the lowest portion of the panel, adjacent to and horizontally aligned with the signal field terminals. It shall be insulated from the cabinet and connected to AC- on the power panel with a single #6 AWG insulated wire. The bus bar shall be sized to accept 5 - #14 AWG solid wires at each terminal and shall have a minimum of 12 positions. This bus shall be used to terminate all the neutral circuits from cable wired to the signal heads.
c. Flashing outputs - each circuit of the transfer relay shall have different flashing circuits.

All terminations shall be grouped by function as listed in NEMA TS-1 standards, Section 13, Tables 13-1 and 13-2. The signal load cell inputs shall be terminated below all other controller and monitor harness termination.

Panels for cabinet types 2 and 3 shall only have terminations of all voltage, monitoring, and coordinator circuits of the controller. The controller load cell controls shall be wired to the load cell

receptacle and other requirements shown in drawings #18A. A single harness shall contain the circuits for A and B connectors. The connectors shall be offset along the end of the harness by six inches. Load cells shall be provided as follows: eight cells, four phase, two overlaps, two pedestrians (Additional details shown on drawing #18A).

Panels for cabinet type 5 shall have the phase overlap outputs "A" and "B" shall be wired respectively to load cells 5 and 6. Pedestrian outputs for phase 2 and 4 shall be wired to load cells 7 and 8 respectively.

Type 6 cabinets shall have overlap outputs "A" through "D" wired respectively to load cells 9 through 12. Wiring shall be arranged on the back panel to facilitate connecting the pedestrian outputs to the load cell inputs by moving wires, without adding wire, connectors, or terminal blocks.

(Engineering Note: The only controller outputs and load cell inputs circuits that are to be terminated on terminal strips are those circuits used for overlap and pedestrian indications. In accordance with the specification these circuits shall be provided to change the inputs of these load cells from either overlap or pedestrian outputs. In addition this will allow the reset circuit for pedestrian isolator cards to be terminated with the correct controller output. This requirement shall be for both the type 5 and 6 cabinets. In reference to logic ground within the cabinets this notation shall apply to all circuits. All reference to logic ground shall be through connector "A" of the controller. In cases where specific controls are used in connector "D", then logic ground of this harness may be used. In all cases logic ground through any connector shall be the same reference within the controller.)

When specified on order or plans, overlaps shall be terminated at different positions than specified above.

18.5.3 Load Cells and Flash Transfer Relays

Signal load cells shall be provided, one for each phase and each overlap. When specified, additional positions and load cells shall be provided for four pedestrian signals in line with the load cells previously specified. All flash transfer relays shall be located on the back panel, adjacent to the load cells. A solid state flasher shall be provided and located as stated below.

The position of the load cells, flashers, and transfer relays shall be between the terminals for the load cell inputs and outputs. In type 2 and 3 cabinets the position of the load cells, flashers, and transfer relays shall be in accordance with drawings #18A. The area above the load cells and flasher shall be open to allow the ventilation to flow freely away from the load cells.

The AC + for the signal load cells shall be terminated as previously specified and be capable of carrying 60 amps, equally distributed to each signal load switch from a terminal strip on the back panel.

The transfer relays shall be operated directly by the voltage to transfer the signal operation from sequential to flashing. No intermediate relay shall be used between the transfer relays and signal

operate/flash circuit. The transfer relays shall be energized during normal operation to connect the signal load cells to the field terminals.

18.5.4 Signal Field Circuits

The output from the load cells shall be located on the lowest terminal strip at the bottom of the back panel. Wiring from the signal heads shall be terminated separately for each indication and there shall be no internal cabinet wiring terminated on the same terminal. The inputs and outputs of the flash transfer relay shall be terminated above and adjacent to the load switch outputs. The arrangement of these terminal strips shall allow the selection of either red or yellow signal indications to flash without needing to un-solder or solder connections. The number of signal circuits which will be transferred to flashing circuits shall equal the maximum number of load switch positions specified. No wiring shall be installed on the terminal for the field wiring.

18.6 POWER PANEL

The power panel shall be mounted on the lower right inside of the cabinet. It shall receive a single phase, 120 VAC, 60 Hz electrical service and shall have three (3) separate terminals for terminating the wires from the service source. This panel shall provide the power required and necessary functions, including cabinet ground, to each panel. The service terminals shall be a mechanical compression type, sized to accept a wire range from #8 to #2 AWG, stranded wire. A ground bus bar shall be located on the lower portion of this panel and terminate all ground circuit within the cabinet. All ground circuits shall be designed for a single path to the ground bar and no ground loops shall be created. The ground bus bar shall be a separate copper or brass multi-terminal bus bar. It shall be mounted directly to the panel and connected to chassis ground input terminal with a single #6 AWG green insulated wire. The bus bar shall be sized to accept 5 - #14 AWG solid wires at each terminal and shall have a minimum of 12 positions. This bus shall be used to terminate all the ground circuits from cable wired to the signal heads. All internal ground wiring to this bar shall be on one end using a maximum of 4 positions.

The power panel components for type 2 and 3 cabinets shall be incorporated on the back panel. Both neutral and ground bus bars shall be located conveniently for installing field wiring. All other requirement mentioned above shall be adhered to. Switches shall be located for easy reach and away from energized parts. (Details shown on drawing #18A-1.)

18.6.1 Control Switches

The following switches shall be located on the power panel and shall perform the functions listed below and labeled as shown:

a. Cabinet light - ON/OFF - this switch shall control the AC + to the cabinet light specified elsewhere in this standard. For type 2, 3, and 4 cabinets the switch shall be part of the fixture.

b. Test - FLASH/AUTO - The "flash position" of this switch shall allow the signal indications to flash and the control equipment to cycle in its normal manner. The "auto" position will not affect the normal operation of the equipment.

18.6.2 Breakers

Breakers shall be provided in each type of cabinet. The AC + power shall have one input and shall be bussed to three (3) separate circuits. The breakers shall be a single pole, molded case, screw mounted on this panel with two #10 screws on a four and one/half inch pattern. Each breaker shall indicate visually that the breaker has been tripped. The following are the functions and labels for each breaker:

a. Controller power - ON/OFF - this shall be rated for ten amps and control the AC + power to the controller and conflict monitor. (filtered and suppressed)

b. Main Power - ON/OFF - this shall be rated for sixty amps and control the AC + power into the cabinet for all equipment. The power for the auxiliary circuits shall not be controlled by this switch.

c. Detector Panel Power - ON/OFF - this shall be rated for ten amps and control the AC + power to the detector panel used for interconnect relay outputs. This circuit shall not be used for detector card rack and shall not be connected to the suppressor on the power panel.

d. Auxiliary Power - ON/OFF - this shall be rated for twenty amps and control the AC + power to the ventilation fan, cabinet light, and convenience outlet. (filtered)

18.6.3 Surge Protection and Filtration

The power for the control equipment shall be protected by a RFI line filter and high voltage surge arresters. The line filter shall be rated at sixty amps on each AC + and AC- line. Terminals on the filter shall be for suppression on the main power, neutral, and ground; and separate terminals for line in and out, neutral out supplying the controller and detector panel power to the breakers. The filter shall attenuate signals both from line to load and load to line. The attenuation in both directions shall be a minimum of 50 decibels over the frequency range of 200 KHz to 75 MHz. The impulse life of the protector shall be capable of operating 20 times at peak current. The clamp voltage shall be 340 volts at 20 Kamps and shall respond to over voltage conditions within 300 nanoseconds. The minimal capability of the protector shall be to discharge a single impulse with a wave shape of 8/20 and current to be 20 Kamps on each side to ground. The insulation resistance between line to ground shall be 100 megohms.

18.6.4 Signal Bus Operation

The signal bus power shall be switched individually by normally opened solid state relays rated a minimum of 60 amps, control voltage 120 VAC (Crydon series 1 - A2475 or equal). The solid state relay shall operate within the NEMA temperature range by derating the device and using necessary heat sinks. All switches are specified elsewhere and the circuit design shall limit the switched current to ten amps max.

18.6.5 Convenience Outlet

The receptacle shall be a feed through, ground fault interrupter type, 20 amps, duplex receptacle. The receptacle shall have three (3) wires from the device to the appropriate terminal on the power panel, (Ground, AC-, and AC +). The feed through shall supply power to the fan and light.

The convenience outlet installed in type 2 and 3 cabinets shall be mounted on the door. The electrical details shall meet the following requirements and details in drawing 18A-1. The convenience outlet in type 5 and above cabinets shall be mounted on the power panel.

18.6.6 Power Panel Isolation

A clear, non-breakable, 1/4" Lexan insulating cover shall be used to shield all open connections and not cover any switch, breaker levers, terminals blocks, bus bars, or convenience outlet. The cover shall be secured in place with screw fasteners and be removable by hand or simple hand tools.

18.7 DETECTOR AND AUXILIARY CONTROL PANELS

A detector panel shall be provided in cabinet types 3, 5, 6, and 7, and located on the left inside wall of the cabinet, except as noted for type 3 cabinet in section 18.7.2. The terminals and wires for detector card inputs, controller vehicle detector input test switches, remote communications, and additional functional inputs/outputs specified shall be on this panel. The upper portion of this panel shall be used for mounting any required terminal blocks. The middle of the panel shall be for vehicle/pedestrian test button and control circuit and field wiring terminals. A six position terminal block with suppressor shall be positioned on the bottom of the panel for communications. There shall be no splices in the wiring.

A separate panel shall be provided for the auxiliary controls including relay bases for interconnection controls, isolating the field circuits and the controller inputs.

18.7.1 Auxiliary Control Function (supplied with all type 2 cabinets and when specified with any other cabinet.)

This panel shall be located on the left lower inside wall of all cabinets, below the detector panel when present, and shall be separate from other panels. Relay bases shall be mounted at the top of this panel and the quantity of bases shall be supplied that will provide the functions required or as indicated on the order.

The relays bases shall be wired isolating the field wiring and the controller inputs/outputs for hardwired interconnect. Field wiring will be terminated at fuse blocks, specified elsewhere in this standard. Additional wiring requirements are given below. The relay bases shall be for two-pole octal relays and have screw terminals for all relay pins. The required functions for hardwired interconnect are; resets, cycles, splits, free, flash, and remote common. Wiring from the interconnect terminations described above shall not be included with any wiring or harnesses on the detector panel.

A terminal block shall be provided below the relay bases where the following are to be terminated. Power for this panel shall be supplied by a separate breaker on the power panel. A minimum of three adjacent positions shall be provided for each AC +, AC-, and ground. This power shall be used for supplying master interconnect power and providing power to external equipment. This power shall not be used for equipment power within the cabinet. Logic common from the controller shall also be terminated on a terminal strip. Controller system operations for dials 2, 3, and 4, split 2, 3, and 4, and offset 1, 2, 3, and 4, shall be terminated on the back panel as stated within this standard. Each system operation terminal shall be wired to the front side of the terminal blocks on the back panel and terminated using a compression spade lug to the inputs of the controller. Each wire shall be identified with a sleeve marked, D-2, D-3, D-4, SP-2, SP-3, SP-4, O-1, O-2, O-3, and O-4 respectively. Two terminal positions shall be provided for free in and out, and two positions for flash in and out. Wiring shall be provided for each, one for free and one for flash, from these terminals to the terminals on the front of back panel, terminated using compression spade lugs. Each identified with a sleeve, free marked FR and flash marked FL. This panel shall conform to drawing 18A of this standard.

(Engineering Note: For railroad preemption inputs, we intended to use the pedestrian isolator cards between field and controller inputs. For hardwired interconnect controls, we will move the wiring on the back panel for master or secondary operation. Similar methods of moving wires will be used to implement other required functions as needed.)

18.7.2 Detector Panel for Type 3 and 5 Cabinets

The detector panel shall be located on the inside right wall of type 3 cabinets and the left wall of type 5 cabinets. The panel shall have terminal positions for the specified field input circuits. The wiring requirements stated above shall be followed. Terminals shall be provided for eight vehicle and four pedestrian detector input circuits.

The card rack shall follow the specified requirements elsewhere stated, however positions shall be provided for one power supply, two-four channel vehicle detector cards, and two pedestrian isolators cards. The wiring for the rack shall be formed to follow the hinge of the door without damage to the wiring.

18.7.3 Detector Panel Test Switches

Detector test switches shall be provided on all detector panels. These switches shall be positioned in between the terminal blocks for the field wiring and adjacent to the input of the channel that the switch is for. Access to the switches shall not be interfered with wires or suppressor. Each switch shall be a momentary push button, normally open switch. There shall be a switch for each detector channel

supplied in the cabinet and for each pedestrian call circuit (2 for 4-phase, and 4 for 8-phase), as per this specification, order, plans, or any addendum. Each switch shall be permanently labeled with the nomenclature of the function it provides (∅ # or ∅ ##). The function of the switches shall be to place a logic ground on the controller vehicle, pedestrian, and system detector inputs. The wiring shall be terminated on the front of the back panel at the associated controller input terminal. A compression type spade lug shall be use and each wire marked with a identification sleeve as follows: VB-∅1, VB-∅2, . . . VB-∅8, PB-∅2, PB-∅4, etc.

18.7.4 Field Wiring - Detector and Auxiliary Panels

The loop lead-in, pedestrian field push button shall be terminated on the sides of the detector panel, the communications shall be terminated on the bottom of the detector panel, and the interconnect and field inputs/outputs shall be terminated on the bottom of the auxiliary panel. Each channel, vehicle and pedestrian, shall be terminated at two adjacent positions for inputs. On the auxiliary panel six NON type fuse holders and one remote common terminal shall be positioned on the bottom of the panel for hardwired interconnect.

The specified lightning protection shall be connected to the designated field terminals.

18.7.5 Communication Harnesses

All additional harnesses required for connecting the modem, line drivers, controller, master, and system hardware in addition to the specified connectors shall be provided and terminated in a fashion required by the manufacturer. Additional harnesses shall not negate any harness specific by this standard. Approval of these harnesses shall be obtained from the Department.

18.7.6 Lightning Protection

All detector and data field wiring shall be terminated on the required terminal block. Minimum voltage clamping shall be 30 volts for both differential and common mode. Current carrying capabilities shall be 400 amps in differential mode and 1000 amps in common mode. Response time for detector protection shall be 40ns and for data lines shall be 1 to 5 ns. The devices shall be mounted to the panel and the leads terminated on each field terminal.

All 120 volt field circuits shall be protected on the equipment side of the fuse by a surge protector. Operating line voltage shall be 120VAC, peak surge trip point for 600 volts/microsecond impulse shall be less than 890 volts. Response time shall be less the 200 nanosecond at 10KV/microsecond. Surge handling ability shall be 20 Kamps. The device shall be mounted on the grounding stud adjacent to the protected terminal.

18.8 POLICE PANEL

The police panel shall be located in the police compartment previously specified and provide switches which are accessible when the police compartment door is opened. The following list of switches shall be located on this panel and be wired to their appropriate circuits to provide the functions identified below:

a. Flash Control Switch - Flash/Normal - this switch shall control the signal output from the controller to cause them to flash in the "Flash" position and to initialize the controller to the start-up phase unless the conflict monitor has detected a conflict. If the monitor has placed the equipment on flash, then this switch shall be inactive. The "Normal" position of the switch shall cause no effect to the signal circuits and shall allow the control equipment to function in its prescribed manner.

b. Signal Shut-Down - On/Off - the "On" position of this switch shall allow the signals to operate in normal manner. The "Off" position of the switch shall cause the signal indications to become dark, regardless of whether the signals were flashing or operating normally and to initialize the controller to the start up phase unless the conflict monitor has detected a conflict.

c. Manual Control - Auto/Manual - All necessary wiring, (manual control enable, interval advance, logic ground) shall be routed to the panel and terminated. A switch shall be provided only when specified and switch the function of the controller from normal operation in the "Auto" position to a manual advance operation in the "Manual" position by a manual push button to advance the controller in accordance with the NEMA standards. In addition to the switch, a manual control shall be provided. The cord shall be terminated on a terminal strip attached to the back of the police panel. The cord shall be weatherproof and coiled, having a maximum retracted length of eight inches and a minimum extended length of five feet. The cord shall be attached to the panel with a cable clamp, and fitted with strain relief bushing at the point it is routed through a five-eighths inch hole in the panel. The manual control shall be on the free end of the cord. The manual control and the connection to the cord shall be weatherproof. A hand grip shall be constructed for normal use by being held in one hand and a momentary contact switch can be activated with the thumb. This control shall be operable between the above mentioned lengths.

c. Emergency Vehicle Detection System Enable - On/Off - All necessary wiring shall be routed to the panel and terminated. A switch shall be provided to activate the EVDS when it is in the on position and the EVDS equipment is installed in the cabinet. In the off position the EVDS equipment shall be disabled and all functions connected to the Traffic Control System Equipment shall be disable allowing the control equipment to operate as programmed. When the EVDS equipment is not installed in the cabinet then this switch shall not effect the operation of the Traffic Control System Equipment.

The back of the panel shall have an aluminum shield to prevent personnel from accidentally coming in contact with the terminals of the switches or terminal strip. With the cover in place, it shall provide visual inspection of the back of the panel and shall not interfere with any equipment when the main door is closed.

19.0 CABINET WIRES AND WIRING

The wiring in the cabinet shall withstand the environmental temperature range as stated in NEMA TS-1. The insulation shall remain flexible over the temperature range and will not begin melting, causing the insulation to reduce in thickness. The insulation shall meet Specification MIL-W-16878D, 105 degrees, 600V, (MIL), heat resistant, polyvinylchloride or approved equal. The wire shall be 600 volts and color coded according to the following list:

HARNESS	COLOR
Controller harness and wiring	Blue
Conflict monitor Harness and wiring	Red
Detector, preemptor, and interconnect wiring	Yellow
All AC +	Black
All AC-	White
All Controller Logic Ground	White/Black Stripe or White/Green Stripe
All Chassis Ground	Green

TABLE 18A-12
WIRING COLOR CODE

The wire shall be stranded copper and sized to carry 125% of the design current and a minimum #22AWG. All signal circuit wiring shall meet the above stated size and be a minimum of #16AWG. All circuits shall be wired using a single conductor; therefore, parallel wiring is not an acceptable method of meeting wire size requirements as stated above. The wires shall be terminated individually by a solder less compression type spade lug appropriately sized or by soldering. All wiring shall be installed having a zero tension after installation.

Wire bundles shall be held in cable form by lacing tape, spiral wrap, or plastic sheathing. The lacing tape shall be flat, braided nylon and 0.090 inch wide, equal to ICO-Rally type LTN-2. The spiral wrap shall be correctly sized to fit the wire bundle and be a weather-resistant polyethylene equal to Panduit spiral wrapping. The insulating tubing shall be clear colored and sized to fit the wire bundle, equal to Alpha PVC-105 plastic tubing. Cable ties are restricted from use on cable bundles between panels and equipment harnesses. Cable ties may be used to bundle wire on panels only. Cable ties shall be self-locking and have properly applied tension according to the manufacturer's specifications. The ties shall be weather resistant nylon equal to T & B ties (MX series).

20.0 CABINET MECHANICAL AND ELECTRICAL HARDWARE

All hardware shall meet the environmental requirements of the controller. All fastening devices, (bolts, washers, screws, etc.), shall not rust when exposed to weather. These shall be hot dipped galvanized, stainless steel or brass. All electrical hardware shall be sealed and electrical contacts protected against moisture and corrosion.

20.1 TERMINAL BLOCKS

Terminal blocks shall be multiple terminal, one piece, rated at a minimum of 300 VDC for all 24 VDC control circuit terminations and a minimum of 600 VDC for all 120 VAC circuits. All field terminal blocks shall be multiple terminal, one piece, rated a 600 VDC and 20 amps. Exceptions to the above requirement for 600 VDC terminal blocks used with the 120 VAC terminations are the 120 VAC terminations of the controller, monitor, and detectors, which are permitted to be terminated on a 300 VDC terminal block. Another exception is where intermixing terminal blocks would result from the above requirement then the block to be used shall be determined by the voltage of the largest number of terminations on that block. The minimum current rating of all terminal blocks shall be 15 amps unless otherwise specified. The minimum amperage for the 120 VAC termination on the power panel shall be 60 amps. Any contradiction between circuit description and hardware restriction shall be resolved by using the larger requirement specified.

In addition to the above requirements for voltage terminations a minimum size screw shall be used. The terminal blocks shall have a minimum screw of #6 for low voltage circuits for the electronic equipment and #8 for all field termination. The power terminal shall be a barrel type screw tightened lug.

20.2 WIRING TERMINALS

All compression terminals shall be constructed with a base material of fine grade high conductive copper per QQ-C-576 and tin plated per MIL-T-10727 plating process for durable corrosion resistance against salt spray and most chemical fumes. The insulation shall be made of vinyl. The terminal shall be installed with tooling recommended by the manufacturer to meet the performance requirements of MIL-T-7928. The use of ring or spade terminals are not being precluded by the above requirement. Each terminal shall be correctly sized to fit the wire and terminal screw.

All soldered connections shall be made using the designed temperature for the solder being used and the location of the connection. The connection shall be made preventing a cold solder joint and excessive winking of the solder into the wire. The insulation of the wire shall not be damaged by excessive overheating at any point on the wire.

20.3 MULTIPLE PIN CONNECTORS

All multiple pin connectors shall be wired in accordance with the connector manufacturer's recommendations or applicable MIL specifications. The type of connector shall be in accordance with this standard, NEMA TS-2 TYPE 2, and as listed below.

Unused sockets and pins shall not be installed in the D connector. A cable clamp designed for each connector shall be installed securely to prevent excessive strain on the wires from being transmitted to the contacts inside the connector housing.

20.4 SWITCHES

All switches, except the detector push button test switches, shall be heavy duty toggle switches and meet the MIL-MS-35059 Series Standards, rated at 20 Amps/125 VAC. The level shall have a seal for sand, dust, and fifteen foot water submersion. The terminals shall be threaded for screws and have a tinned finish. Mounting shall be by two hex nuts and two internal-tooth, lock washers on a ½ inch shank through which the toggle lever is mounted. The number of poles and lever positions shall be determined by the applications previously stated.

20.5 LOAD CELL AND RELAY BASES

The load cell and the flash transfer relay sockets shall be rigidly mounted on the back panel. The insulating ridge on the front of the socket shall be reinforced with a metal mounting ring designed by the manufacturer of the socket. This ring shall be secured to the socket with a minimum of two screws and the ring fastened to the panel. Both sockets shall a minimum current rating of 15 amps, individual contacts, voltage rating of 1750 volts rms, pre-grounded, or grounding pin connected to chassis ground.

All relay bases used for special circuits specified previously, and not otherwise specified, shall be rated a 300 VDC and 10 Amps. Bases shall be front-panel mounted and shall have a closed back for insulation from the panel. The socket shall be octal and wired to barrier type terminals permanently numbered. Terminal screws shall be tinplated, #6-32 with captive nuts, and shall accept #20 to #12 AWG wire.

20.6 CABLE CLAMPS

All cable clamps shall have a metal loop and cushion made with a general purpose neoprene. The metal shall be aluminum 20204-T4 or stainless steel per Specification MIL-S-6721, annealed (321 or 347). The neoprene shall meet AMS Specification 3209. The clamp shall be sized to grip the cable it is being used on without damaging any insulation.

20.7 FUSES AND HOLDERS

All fuses located on the all removable electronic equipment shall be a 1/4 inch by 1-1/4 inch glass tube fuse rated at a minimum of 125 VAC. All panel mounted fuses shall be U.L. Class "H" fuses rated at 250 VAC, fast acting. Fuses shall be provided and equal to Type NON 0-30 Amps.

The fuse holder shall be constructed of a general purpose phenolic material U.L. listed for 250 VAC. The fuse holders shall have barriers on each side of the fuse and shall have a screw type terminal.

20.8 RELAY AND MOTOR SUPPRESSOR

A suppressor shall be installed on all AC relay coils and motor inputs. The suppressor shall be a series resistor-capacitor, 100 ohms-0.1 microfarad, and rated for 600 volts.

20.9 IDENTIFICATION SLEEVES

Identification sleeves shall be supplied on specified wires. The sleeve shall have the required identification printed or typed with a minimum size of pica-pitch 10. The sleeve shall be installed on the sire providing a self-laminating protective shield over the legend. Acceptable material shall be transparent 3.5 mil. vinyl film with acrylic pressure sensitive adhesive. The operating temperature range shall be -40° C to 80° C. The size of the label shall provide sufficient area for the printed identification.

Application of the sleeve onto the wire shall be neat and smooth completely protecting the identification label.

21.0 TESTING

A test(s) shall be performed on the cabinet containing the completely assembled equipment and control equipment by the manufacturer prior to shipment. Malfunctions or defects shall be corrected and the equipment retested. The complete log beginning with the first test, showing the results of the all tests, shall be delivered with the equipment. The manufacturer shall furnish certification with the documentation required in section 24, stating that the results of the test are true and accurate and stating the name and title of the person conducting the test. The test shall require the operation of the equipment with each signal circuit connected to an incandescent load of at least six-hundred watts. The equipment shall operate sequentially and continuously for at least forty-eight hours, as stated above, in an environment having a minimum temperature of one-hundred-forty degrees Fahrenheit.

The complete system, including all local controllers, cabinets, on-street master controller, and modems shall be assembled and interconnected at the point of manufacture.

The system shall be completely performance tested and a written test report submitted in the documentation required in Section 24. The Engineer reserves the right to an on-site system inspection at the point of manufacture to witness the system operation and the performance test of the system.

After installation and debugging of all central control equipment, local controllers, detectors, communications, and other system hardware and software elements, the system shall be required to complete a 30 day period of acceptable operation. The system test shall fully and successfully demonstrate all system functions using live detector data and controlling all system-controlled intersections.

22.0 TRAINING

Formal classroom training and "hands-on" operations training shall be provided for personnel designated by this agency. The engineering, operations and maintenance training shall take place at

locations within the state of Louisiana designated by this agency. The technician training shall take place at the manufacturer's facility. Classroom training shall be given for the engineering, operations and maintenance sessions.

Five training sessions are required during the contract period. Three maintenance sessions, one engineering session and one technician session shall be given. The engineering session shall provide for a maximum of twenty-five people. Each maintenance session shall provide for a maximum of fifteen people. The technician session shall provide for a maximum of four people. Copies of course materials shall be supplied to and retained by each attendant. Training shall occur after delivery of initial order, but before one year after date of final acceptance of initial order. The Manufacturer shall submit for each type of session, syllabuses to the Traffic Signal Engineer for approval before classes are scheduled.

22.1 OPERATIONAL TRAINING

Training for the operation of the system shall include analyzing system performance and revision of system operating parameters based on the analysis. The session shall be a minimum of two days and presented at an engineering level.

The training topics shall include as a minimum:

a. How to enter commands (, System software, utilities, and disk management)
b. Operation of all devices
c. Generation and editing of arterial master and intersection controller databases
d. Uploading/downloading of arterial master and intersection controller databases
e. Procedure for enabling dynamic displays
f. Explanation of the communication system

22.2 MAINTENANCE TRAINING

Training for maintenance personnel shall include detailed, field level troubleshooting and basic interrogation of the controller unit. The training shall consist of three sessions. Two sessions shall be remedial and one session shall cover more advanced material. Each session shall be three days in length. Course content shall emphasize information required to successfully pass the below specified tests.

Maintenance personnel shall be tested by the Vendor as to their ability to repair and/or diagnose simulated failures, and to gather basic information about a particular controller unit (i.e., min time, conflicting and non-conflicting phases, etc.). There shall be at least ten (10) controller/cabinet configurations per session type. Cabinets, controllers and miscellaneous materials shall be supplied by the Department. Wiring and programming necessary to conduct the tests shall be performed by the Vendor. The Vendor shall recommend at least ten (10) simulated failures, timing schemes and other configurations to be used for each type of test. The Department shall supply the Vendor with the final, approved test configurations, however, the Vendor shall not be required to perform more than six (6) hours of wiring or programming in development of the test configurations.

Final test questions shall be supplied by the Department. A Department representative will be present at all time to assist the Vendor in administering the test.

22.3 TECHNICIAN TRAINING

The manufacturer shall provide a minimum of two, four-day sessions at their facility for a maximum of three Department employees per session. The manufacturer shall be responsible for all costs associated with such training except for the cost of travel.

Training sessions shall be highly technical and include as a minimum the following topics:

a. Architecture of controller unit.
b. Controller troubleshooting to component level.
c. Cabinet wiring and troubleshooting
d. Advanced controller programming including diamond sequencing.

22.4 ENGINEERING TRAINING

Training for engineering personnel shall focus on implementing traffic engineering data with the controller. The manufacturer shall provide one two-day session for a maximum of 25 participants.

The first day of the session shall emphasize basic operation and interrogation of the controller. The second day of the session shall emphasize implementing traffic engineering data and include, at a minimum the following:

a. Programming an actuated, coordinated controller based on intersections provided by the Department.
b. Theory and operation of volume density operation and associated programming methods.
c. Theory and operation of three- and four-phase diamond sequencing and associated programming methods.

23.0 WARRANTY

The system equipment shall be warranted for a minimum of one year. All warranty periods shall begin at the date of acceptance by the Department.

24.0 DOCUMENTATION

Detailed technical information on material being offered shall be supplied with the bids for equipment directly shipped to the Department and with the material submittal for equipment being installed on projects. Information shall be for all items required by this specification and on the order or in the plans.

Manuals shall be supplied for all equipment and components of the system. The manuals supplied for software, peripherals, and modems shall be from the original source. The manual shall be comprehensive, easy to use and understand, and completely descriptive of the product.

24.1 CLOSED LOOP SYSTEM OPERATION MANUAL

a. Step-by-step system installation procedures
b. Operating instructions
c. System set-up procedures
d. Explanations and descriptions of data entry procedures
e. Menu item descriptions

24.2 EQUIPMENT MANUALS

a. Technical descriptions
b. Operating instructions
c. Theory of operation
d. Detailed schematic diagrams
e. Assembly drawings
f. Wiring diagram
g. Troubleshooting procedures to assist the maintenance staff in the identification and isolation of malfunctions
h. Parts list

24.3 CABINET WIRING

Complete wiring details shall be shown on the drawings. The drawings shall use the same nomenclature to identify the various components as referred to in this standard. If no name was mentioned in this standard then a reasonable nomenclature shall be used. A legend shall be provided on all drawings identifying acronyms and symbols. Two drawings shall be provided with each cabinet. The DOTD specification shall be followed when supplying documentation for projects.

FIGURES

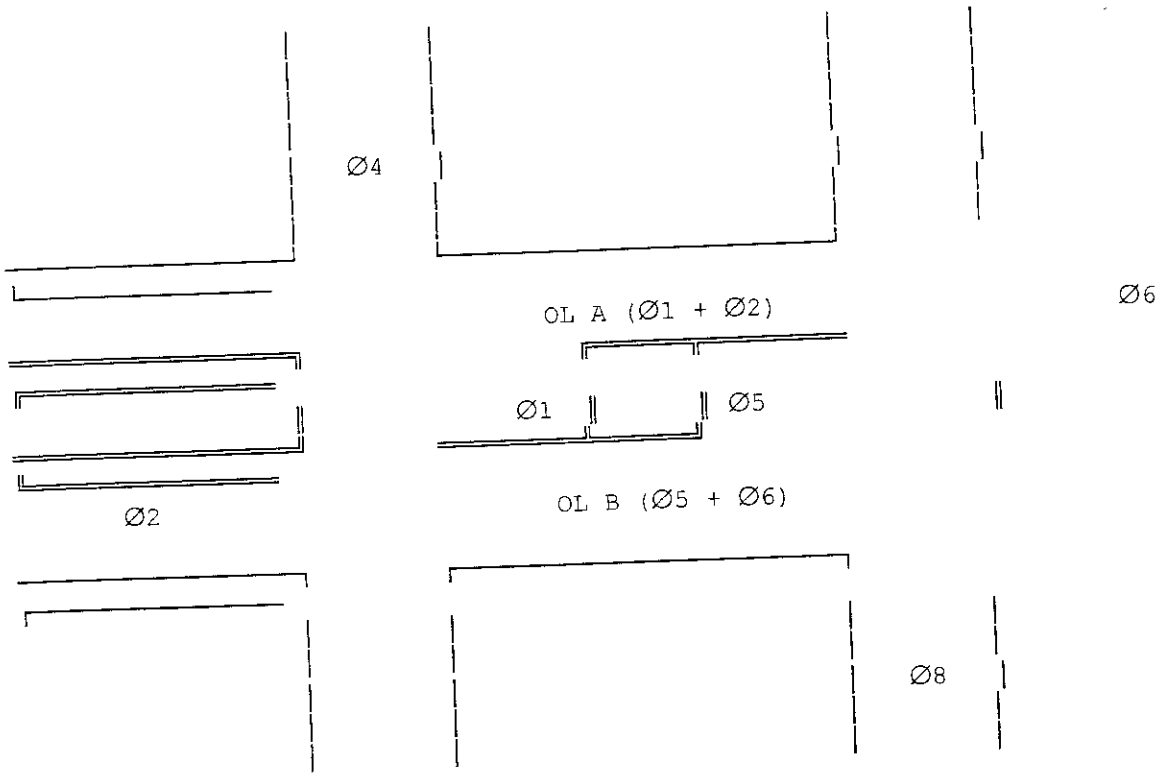

FIGURE 18A-3
DIAMOND INTERSECTION PHASE ASSIGNMENT

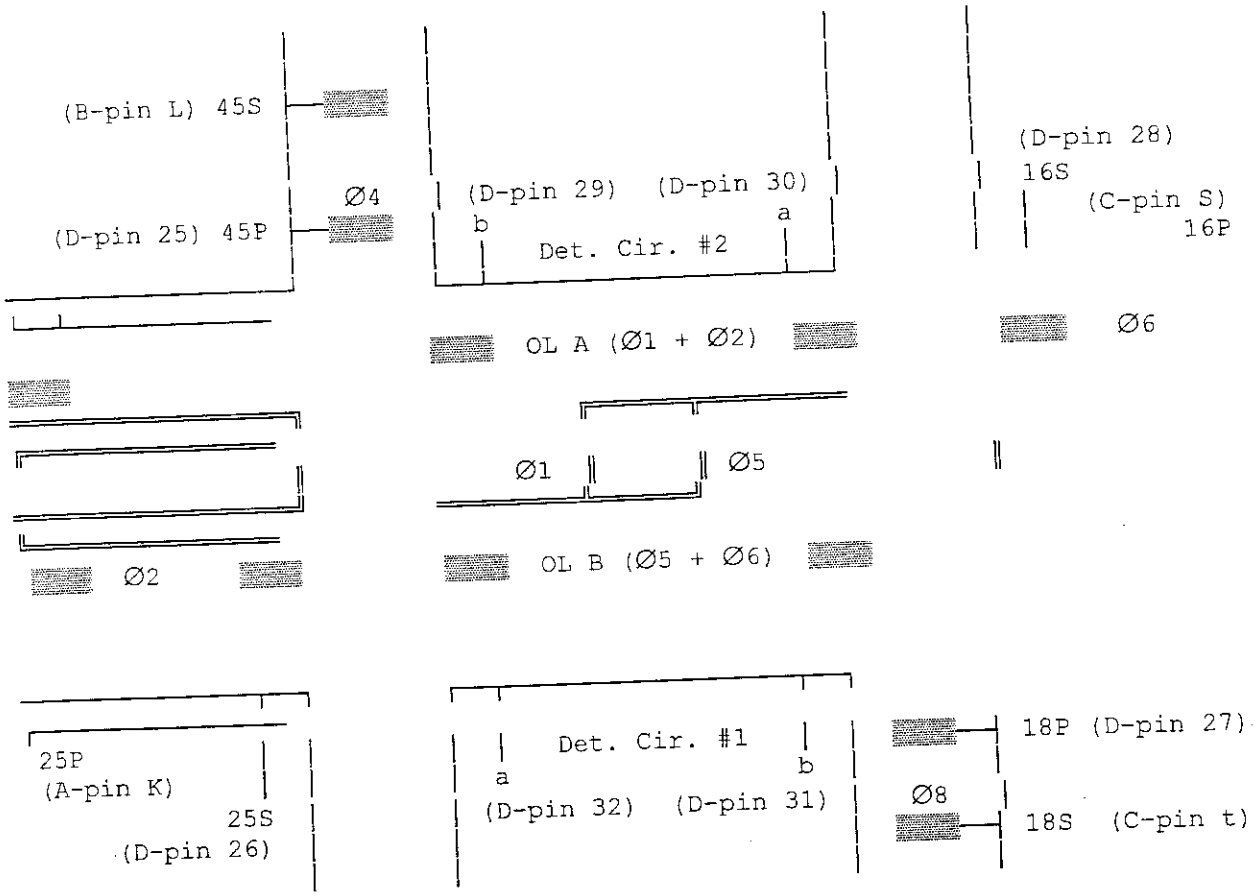

FIGURE 18A-4
VEHICLE DETECTOR ASSIGNMENT - 4 PHASE DIAMOND

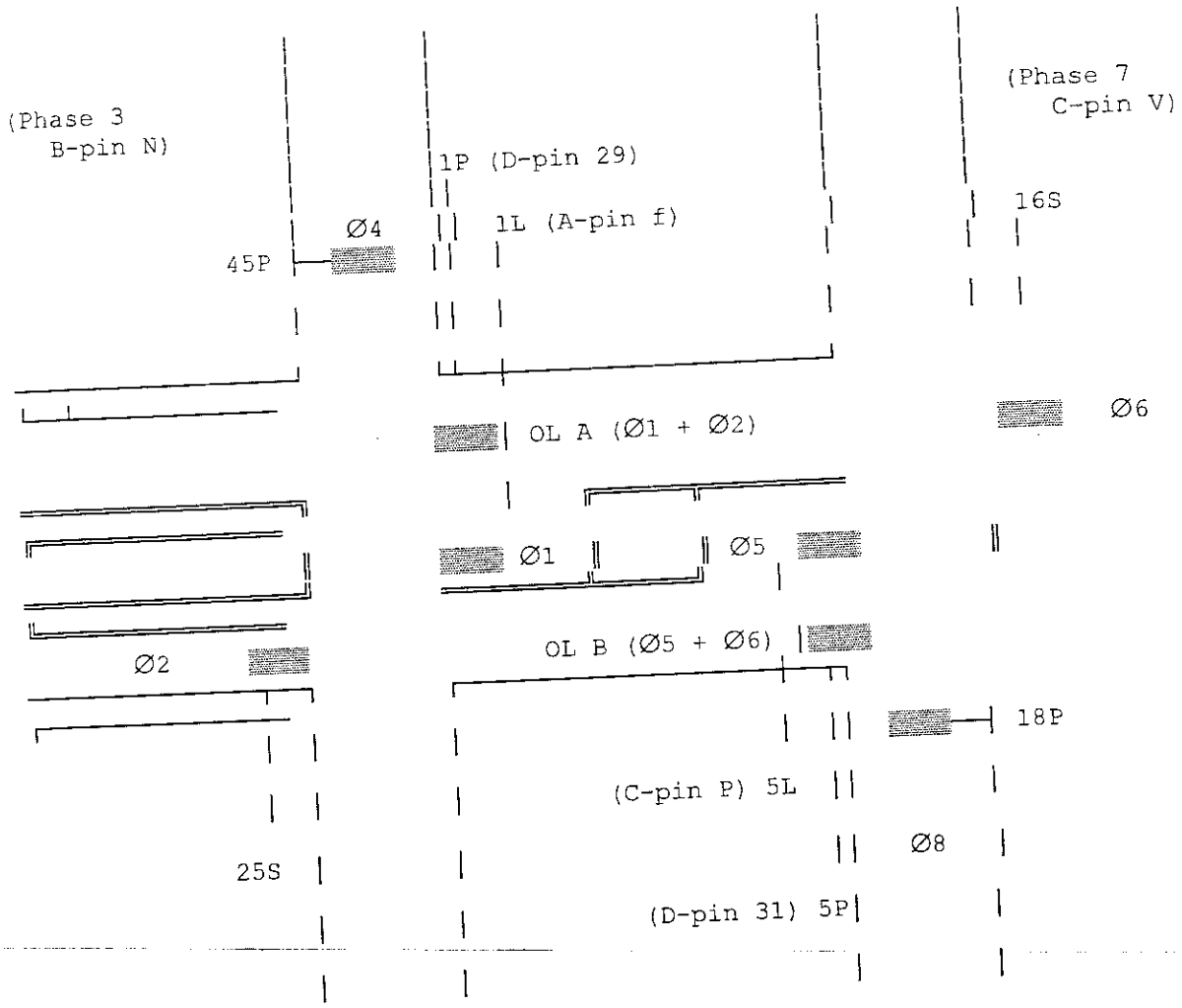

FIGURE 18A-5
VEHICLE DETECTOR ASSIGNMENT - 3 PHASE DIAMOND

APPENDIX

PIN/SOCKET ASSIGNMENTS FOR D CONNECTOR ON BACK PANEL

PIN	FUNCTION
1	OFFSET 1 IN
2	CYCLE 2 IN
3	CYCLE 3 IN
4	FLASH IN
5	OFFSET 2 IN
6	OFFSET 3 IN
7	INTERCONNECT FREE
8	SPLIT 2 IN
9	SPLIT 3 IN
10	SPL FUNCTION 2 OUT (TBC)
11	COMPUTER ON-LINE
12	THREE PHASE DIAMOND SELECT
13	FOUR PHASE DIAMOND SELECT
14	RESERVED
15	RESERVED
16	EXT RESYNC INPUT
17	MASTER SELECT
18	SYNC INPUT
19	PREEMPT 1 IN
20	PREEMPT 2 IN
21	PREEMPT 3 IN
22	PREEMPT 4 IN
23	PREEMPT 5 IN
24	PREEMPT INTERLOCK
25	SYSTEM DET. 1/DETECTOR 45P INPUT
26	SYSTEM DET. 2/DETECTOR 25S INPUT
27	SYSTEM DET. 3/DETECTOR 18P INPUT
28	SYSTEM DET. 4/DETECTOR 16S INPUT
29	SYSTEM DET. 5/DET. #2b-1P INPUT
30	SYSTEM DET. 6/DET. #2a INPUT
31	SYSTEM DET. 7/DET. #1b-5P INPUT
32	SYSTEM DET. 8/DET. #1a INPUT
33-34	SPARE
35	CONTROLLER INTERLOCK DIAMOND
36	COMP. SEL 1
37	COMP. SEL 2
38	COMP. SEL 3
39-41	SPARE (DO NOT USE)
42	CABINET INTERLOCK DIAMOND
43	SPL FUNCTION 1 OUT (TBC)
44	SPLIT 3 OUT
45	SPLIT 2 OUT
46	INTERCONNECT FREE OUT
47	OFFSET 3 OUT
48	OFFSET 2 OUT
49	FLASH OUT
50	CYCLE 3 OUT
51	CYCLE 2 OUT
52	OFFSET 1 OUT
53	+24 VDC
54	LOGIC GROUND
55	CHASSIS GND
56	RESERVED
57	RESERVED

PIN/SOCKET ASSIGNMENTS FOR E CONNECTOR ON BACK PANEL

PIN	FUNCTION
1	AC +
2	AC-
3	CHASSIS GROUND
9	PREEMPT 1
10	PREEMPT 2
11	PREEMPT 3
12	PREEMPT 4
13	PREEMPT 5
15	LOGIC GROUND

18A DRAWINGS

		DRAWING NO.	SHEET NO.
		19A	1

57 PIN
AMP #206438-1

D CONNECTOR

28 PIN
AMP #206038-1

E CONNECTOR

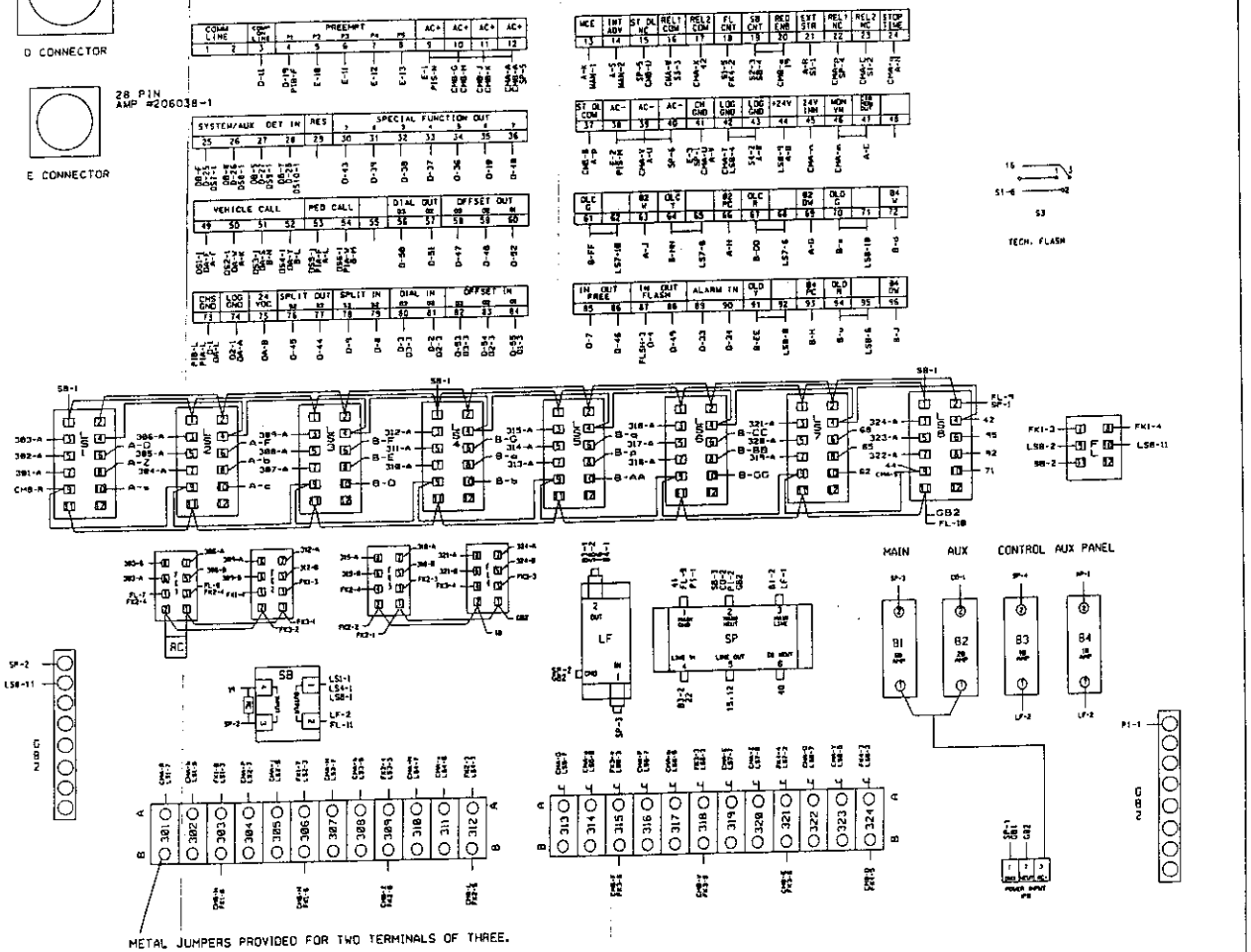

NOTE: WIRING AND TERMINATIONS ON AUXILLARY PANEL AND DETECTOR RACK IN TYPE 3 CABINETS ONLY.

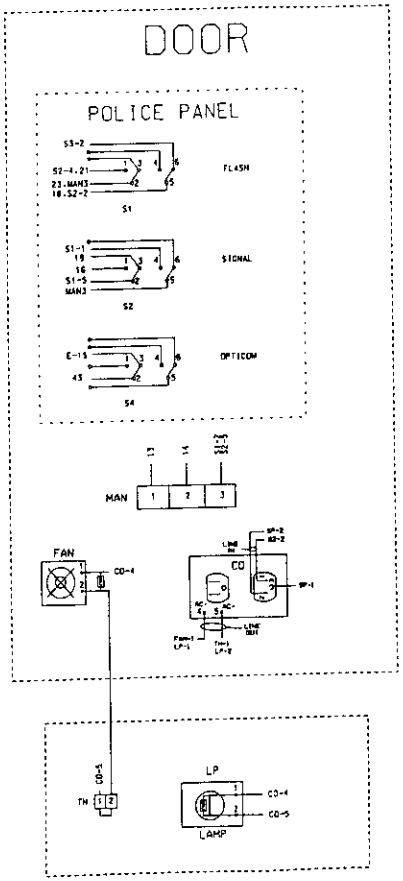

BACKPANEL WIRING
TYPE 2 & 3 CABINETS

APRIL 8, 1996

STATE OF LOUISIANA
DEPARTMENT OF TRANSPORTATION AND DEVELOPMENT

DATE	DESCRIPTION	BY
	REVISIONS	

DESIGNED JTY/MB | DETAILED MB | GRAPHICS AREA
CHECKED JTY | CHECKED | FILENAME BACKPNL_96A

		DRAWING NO.	SHEET NO.
		18A	2

CONNECTOR A

PIN	WIRE	FUNCTION	TO
a	——	RESERVED	
b	A-2	+24 VDC EXT.	44
c	A-3	VOLT. MON	47
d	A-4	Ø1 RED	LS1-6
e	A-5	Ø1 DONT WALK	
f	A-6	Ø2 RED	LS2-6
g	A-7	Ø2 DONT WALK	69
h	A-8	Ø2 PED CLEAR	68
j	A-9	Ø2 WALK	63
k	A-10	Ø2 YH CL DET	58
l	A-11	Ø2 PED CL DET	53
m	A-12	Ø2 HOLD	
n	A-13	STOP TIMING 1	24
p	A-14	(NH HX TERM1)	
r	A-15	EXTERNAL ST	21
s	A-16	INT ADVANCE	14
t	A-17	IND LAMP CONT	
u	A-18	AC COMMON	39
v	A-19	CHASSIS GND	41
w	A-20	LOGIC GND	42
x	A-21	FL LOGIC OUT	
y	A-22	STAT BIT (1)	
z	A-23	Ø1 YELLOW	LS1-8
a	A-24	Ø1 PED CLEAR	
b	A-25	Ø2 YELLOW	LS2-8
c	A-26	Ø2 GREEN	LS2-10
d	A-27	Ø2 CHECK	
e	A-28	Ø2 Ø ON	
f	A-29	Ø1 YH CL DET	49
g	A-30	Ø1 PED CL DET	
h	A-31	Ø1 HOLD	
j	A-32	FORCE OFF (1)	
k	A-33	EXT MIN RECAL	
l	A-34	MAN CONT ENB	13
m	A-35	CNA L	
n	A-36	TEST INPUT A	
p	A-37	AC (CONTROL)	37
r	A-38	SPARE 1	
s	A-39	STAT BIT 8 (1)	
t	A-40	Ø1 GREEN	LS1-10
u	A-41	Ø1 WALK	
v	A-42	Ø1 CHECK	
w	A-43	Ø2 PED OMIT	
x	A-44	OMIT RED CL 1	
y	A-45	RED RST MODE	
z	A-46	SPARE 2	
a	A-47	CNA 2	
bb	A-48	TEST INPUT B	
cc	A-49	WALK REST MOD	
dd	A-50	STAT BIT A-1	
ee	A-51	Ø1 Ø ON	
ff	A-52	Ø1 PED OMIT	
gg	A-53	PED RECYCLE 1	
hh	A-54	MAX 2 SELECT 1	
jj	A-55	SPARE 3	

CONNECTOR B

PIN	WIRE	FUNCTION	TO
A	B-1	Ø1 Ø NEXT	
B	——	SPARE 1	
C	B-3	Ø2 Ø NEXT	
D	B-4	Ø3 GREEN	LS3-10
E	B-5	Ø3 YELLOW	LS3-8
F	B-6	Ø3 RED	LS3-6
G	B-7	Ø4 RED	LS4-6
H	B-8	Ø4 PED CLEAR	93
J	B-9	Ø4 OV DRV	96
K	B-10	Ø4 CHECK	
L	B-11	Ø4 VEH CL DET	52
M	B-12	Ø4 PED CL DET	54
N	B-13	Ø3 VEH CL DET	51
P	B-14	Ø3 PED CL DET	
R	B-15	Ø3 Ø OMIT	
S	B-16	Ø2 Ø OMIT	
T	B-17	Ø5 PED OMIT	
U	B-18	Ø1 Ø OMIT	
V	B-19	PED RECYC (2)	
W	B-20	SPARE 2	
X	B-21	SPARE 3	
Y	B-22	Ø3 WALK	
Z	B-23	Ø3 PED CL	
a	B-24	Ø3 ON	
b	B-25	Ø4 GREEN	LS4-10
c	B-26	Ø4 YELLOW	LS4-8
d	B-27	Ø4 WALK	72
e	B-28	Ø4 Ø ON	
f	B-29	Ø4 Ø NEXT	
h	B-30	Ø4 Ø NEXT	
k	B-31	Ø4 HOLD	
l	B-32	Ø2 HOLD	
j	B-33	Ø3 PED OMIT	
k	B-34	Ø6 PED OMIT	
m	B-35	Ø7 PED OMIT	
n	B-36	Ø8 PED OMIT	
p	B-37	OL A YELLOW	LS5-8
s	B-38	OL A RED	LS5-6
t	B-39	Ø3 CHECK	
v	B-40	Ø3 Ø ON	
w	B-41	Ø3 Ø NEXT	
x	B-42	OL D RED	94
y	——	SPARE 4	
z	B-44	OL D GREEN	78
a	B-45	Ø4 PED OMIT	
b	——	SPARE 5	
c	B-47	MAX 2 SELECT2	
AA	B-48	OL A GREEN	LS5-10
BB	B-49	OL B YELLOW	LS6-8
CC	B-50	OL B RED	LS6-6
DD	B-51	OL C RED	67
EE	B-52	OL D YELLOW	91
FF	B-53	OL C GREEN	61
GG	B-54	OL B GREEN	LS6-10
HH	B-55	OL C YELLOW	64
	B-56	SHELL GROUND	

CONNECTOR D

PIN	WIRE	FUNCTION	TO
1	D-1	OFFSET 1 - IN	84
2	D-2	CYCLE 2 - IN	81
3	D-3	CYCLE 3 - IN	88
4	D-4	FLASH IN	87
5	D-5	OFFSET 2 - IN	
6	D-6	OFFSET 3 - IN	
7	D-7	FREE IN	85
8	D-8	SPLIT 2 - IN	79
9	D-9	SPLIT 3 - IN	78
10	D-10	SPL FUNC 2	35
11	D-11	COMP ON LINE	
12	D-12	RESERVED	
13	D-13	RESERVED	
14	D-14	RESERVED	
15	D-15	RESERVED	
16	D-16	EXT SYNC	
17	D-17	MASTER SELECT	
18	D-18	SYNC IN	
19	D-19	PREEMPT 1	1
20	D-20	PREEMPT 2	2
21	D-21	PREEMPT 3	3
22	D-22	PREEMPT 4	4
23	D-23	PREEMPT 5	5
24	D-24	PHT INT LK	77
25	D-25	SYS DET 1	25
26	D-26	SYS DET 2	26
27	D-27	SYS DET 3	27
28	D-28	SYS DET 4	28
29	D-29	SYS DET 5	
30	D-30	SYS DET 6	
31	D-31	SYS DET 7	
32	D-32	SYS DET 8	
33	D-33	ALARM IN	89
34	D-34	ALARM IN	90
35	D-35	DMD CTLR INTL	
36	D-36	SPL FUNC 3	34
37	D-37	SPL FUNC 4	33
38	D-38	SPL FUNC 5	32
39	D-39	SPL FUNC 6	31
40	D-40	SPL FUNC 7	30
41	D-41		
42	D-42	DMD CAB INTL	
43	D-43	SPL FUNC 1	36
44	D-44	SPLIT 3 OUT	75
45	D-45	SPLIT 2 OUT	76
46	D-46	FREE OUT	86
47	D-47	OFFSET 3 OUT	58
48	D-48	OFFSET 2 OUT	59
49	D-49	FLASH OUT	80
50	D-50	DIAL 3 OUT	56
51	D-51	DIAL 2 OUT	57
52	D-52	OFFSET 1 OUT	60
53	D-53	+24 VDC IN	75
54	D-54	LOGIC GROUND	74
55	D-55	CHASSIS GROUND	73
56	D-56	RESERVED	
57	D-57	RESERVED	

NEMA 12 MONITOR

PIN	WIRE	FUNCTION	TO
A	CMA-1	AC +1 INPUT	12
B	CMA-2	OUT REL 1 OPEN	
C	CMA-3	OUT REL 2 CLO	23
D	CMA-4	CHAN 12 GREEN	322
E	CMA-5	CHAN 11 GREEN	319
F	CMA-6	CHAN 10 GREEN	316
G	CMA-7	CHAN 9 GREEN	313
H	CMA-8	CHAN 8 GREEN	
J	CMA-9	CHAN 7 GREEN	
K	CMA-10	CHAN 6 GREEN	
L	CMA-11	CHAN 5 GREEN	
M	CMA-12	CHAN 4 GREEN	310
N	CMA-13	CHAN 3 GREEN	307
P	CMA-14	CHAN 2 GREEN	304
R	CMA-15	CHAN 1 GREEN	301
S	CMA-16	+24 MON I	LS8-9
T	CMA-17	LOGIC GROUND	42
U	CMA-18	CHASIS GROUND	41
V	CMA-19	AC-	39
W	CMA-20	OUT REL 1 COM	16
X	CMA-21	OUT REL 2 COM	17
Y	CMA-22	CHAN 12 YELLOW	323
Z	CMA-23	CHAN 11 YELLOW	320
a	CMA-24	CHAN 10 WALK	
b	CMA-25	CHAN 10 YELLOW	317
d	CMA-26	CHAN 9 YELLOW	314
d	CMA-27	CHAN 8 YELLOW	
f	CMA-28	CHAN 7 YELLOW	
g	CMA-29	CHAN 6 YELLOW	
h	CMA-30	CHAN 5 YELLOW	
k	CMA-31	CHAN 3 YELLOW	308
l	CMA-32	CHAN 3 WALK	
j	CMA-33	CHAN 2 YELLOW	305
k	CMA-34	CHAN 1 YELLOW	302
m	CMA-35	CONT VOLT MON	48
n	CMA-36	+24 MON INHIBIT	45
p	CMA-37	OUT REL 1 CLO	22
q	CMA-38	OUT REL 2 OP	24
r	CMA-39	CHAN 12 WALK	
s	CMA-40	CHAN 11 WALK	
t	CMA-41	CHAN 10 WALK	
u	CMA-42	CHAN 9 WALK	
v	CMA-43	CHAN 7 WALK	
w	CMA-44	CHAN 5 WALK	
x	CMA-45	CHAN 4 YELLOW	311
y	CMA-46	CHAN 2 WALK	
z	CMA-47	CHAN 1 WALK	
AA	CMA-48	SPARE 1	
BB	CMA-49	RESET	
CC	CMA-50	INTERLOCK A	
DD	CMA-51	INTERLOCK B	
EE	CMA-52	CHAN 6 WALK	
FF	CMA-53	CHAN 4 WALK	
GG	CMA-54	SPARE 2	
HH	CMA-55	SPARE 3	

NEMA 12 MONITOR

PIN	WIRE	FUNCTION	TO
A	CMB-1	AC +11 INPUT	12
B	CMB-2	SD REL COM	38
C	CMB-3	SD REL OP	
D	CMB-4	CHAN 12 RED	324
E	CMB-5	CHAN 11 RED	321
F	CMB-6	CHAN 9 RED	315
G	CMB-7	CHAN 8 RED	11
H	CMB-8	CHAN 7 RED	11
J	CMB-9	CHAN 6 RED	11
K	CMB-10	CHAN 5 RED	11
L	CMB-11	CHAN 4 RED	312
M	CMB-12	CHAN 2 RED	306
N	CMB-13	CHAN 1 RED	303
P	CMB-14	SPARE 1	
R	CMB-15	+24V MON II	LS1-9
S	CMB-16	SPARE 2	
T	CMB-17	SPARE 3	
U	CMB-18	SD REL CLO	18
V	CMB-19	CHAN 10 RED	318
W	CMB-20	SPARE 4	
X	CMB-21	SPARE 5	
Y	CMB-22	SPARE 6	
Z	CMB-23	CHAN 3 RED	309
a	CMB-24	RED ENABLE	26
b	CMB-25	SPARE 7	
c	CMB-26	SPARE 8	

CARD RACK POWER SUPPLY

PIN	WIRE	FUNCTION	TO
A	PS-1	LOGIC GND	DA-A
B	PS-2	+24 VOLTS	DA-B
C	PS-3	+24 VOLTS	
L	PS-4	CHASSIS GND	DA-L
M	PS-5	AC (+)120V	P1A-M
N	PS-6	AC (+)120	P1A-N
P	PS-7	+24 VOLTS	
R	PS-8	+24 VOLTS	

CONNECTOR E

PIN	WIRE	FUNCTION	TO
A	E-1	AC +	9
B	E-2	AC -	38
C	E-3	CHASSIS GND	41
D	E-4	SPARE	
E	E-5	SPARE	
F	E-6	SPARE	
G	E-7	SPARE	
H	E-8	SPARE	
J	E-9	PREEMPT 1	4
K	E-10	PREEMPT 2	5
L	E-11	PREEMPT 3	6
M	E-12	PREEMPT 4	7
N	E-13	PREEMPT 5	8
P	E-14	SPARE	
R	E-15	LOGIC GND	S4-3
S	E-16	SPARE	
T	E-17	SPARE	
U	E-18	SPARE	
V	E-19	SPARE	
W	E-20	SPARE	
X	E-21	SPARE	
Y	E-22	SPARE	
Z	E-23	SPARE	
a	E-24	SPARE	
b	E-25	SPARE	
c	E-26	SPARE	
d	E-27	SPARE	
e	E-28	SPARE	

FOUR CHANNEL CARD RACK

PIN	WIRE	FUNCTION	TO
A	DA-1	LOGIC GND	P1-1, P2-1, P3-1, P4-1
B	DA-2	+24 VDC	P1-2, P2-2, P3-2, P4-2
C	DA-3	RESERVED	
D	DA-4	CHAN 1 INPUT	DP-1
E	DA-5	CHAN 1 INPUT	DP-2
F	DA-6	CHAN 1 OUT (+)	49
H	DA-7	CHAN 1 OUT (-)	
J	DA-8	CHAN 2 INPUT	DP-3
K	DA-9	CHAN 2 INPUT	DP-4
L	DA-10	CHASSIS GND	P1-3, P2-3, P3-3, P4-3
M	DA-11	RESERVED	
N	DA-12	RESERVED	
P	DA-13	CHAN 3 INPUT	DP-5
R	DA-14	CHAN 3 INPUT	DP-6
S	DA-15	CHAN 3 OUT (+)	51
T	DA-16	CHAN 3 OUT (-)	
U	DA-17	CHAN 4 INPUT	DP-7
V	DA-18	CHAN 4 INPUT	DP-8
W	DA-19	CHAN 2 OUT (+)	50
X	DA-20	CHAN 2 OUT (-)	
Y	DA-21	CHAN 4 OUT (+)	52
Z	DA-22	CHAN 4 OUT (-)	

FOUR CHANNEL CARD RACK

PIN	WIRE	FUNCTION	TO
A	DB-1	LOGIC GND	DA-A
B	DB-2	+24 VDC	DA-B
C	DB-3	RESERVED	
D	DB-4	CHAN 1 INPUT	DP-9
E	DB-5	CHAN 1 INPUT	DP-10
F	DB-6	CHAN 1 OUT (+)	25
H	DB-7	CHAN 1 OUT (-)	
J	DB-8	CHAN 2 INPUT	DP-11
K	DB-9	CHAN 2 INPUT	DP-12
L	DB-10	CHASSIS GND	DA-L, P1A-L
M	DB-11	RESERVED	
N	DB-12	RESERVED	
P	DB-13	CHAN 3 INPUT	DP-21
R	DB-14	CHAN 3 INPUT	DP-22
S	DB-15	CHAN 3 OUT (+)	27
T	DB-16	CHAN 3 OUT (-)	
U	DB-17	CHAN 4 INPUT	DP-23
V	DB-18	CHAN 4 INPUT	DP-24
W	DB-19	CHAN 2 OUT (+)	26
X	DB-20	CHAN 2 OUT (-)	
Y	DB-21	CHAN 4 OUT (+)	28
Z	DB-22	CHAN 4 OUT (-)	

PED ISOLATION CARD A

PIN	WIRE	FUNCTION	TO
a	PIA-1	SPARE	
b	PIA-2	SPARE	
c	PIA-3	SPARE	
d	PIA-4	INPUT *1	DP-13
e	PIA-5	INPUT COMMON	DP-14
f	PIA-6	OUTPUT *1 (+)	53
h	PIA-7	OUTPUT *1 (-)	
j	PIA-8	INPUT *2	DP-15
k	PIA-9	INPUT COMMON	DP-16
l	PIA-10	CHASSIS GND	P2-L, P3-L, P4-L
m	PIA-11	AC (+)120V	P2-M, P3-M, P4-M
n	PIA-12	AC (+)120V	P1A-N
p	PIA-13	SPARE	
r	PIA-14	SPARE	
s	PIA-15	SPARE	
t	PIA-16	SPARE	
u	PIA-17	SPARE	
v	PIA-18	SPARE	
w	PIA-19	OUTPUT *2 (+)	54
x	PIA-20	OUTPUT *2 (-)	
y	PIA-21	SPARE	
z	PIA-22	SPARE	

PED ISOLATION CARD B

PIN	WIRE	FUNCTION	TO
a	PIB-1	SPARE	
b	PIB-2	SPARE	
c	PIB-3	SPARE	
d	PIB-4	INPUT *1	AP-17
e	PIB-5	INPUT COMMON	AP-18
f	PIB-6	OUTPUT *1 (+)	76
h	PIB-7	OUTPUT *1 (-)	
j	PIB-8	INPUT *2	AP-19
k	PIB-9	INPUT COMMON	AP-20
l	PIB-10	CHASSIS GND	DIA-L
m	PIB-11	AC (+)120V	P1A-M
n	PIB-12	AC (+)120V	P1A-N
p	PIB-13	SPARE	
r	PIB-14	SPARE	
s	PIB-15	SPARE	
t	PIB-16	SPARE	
u	PIB-17	SPARE	
v	PIB-18	SPARE	
w	PIB-19	OUTPUT *2 (+)	77
x	PIB-20	OUTPUT *2 (-)	
y	PIB-21	SPARE	
z	PIB-22	SPARE	

BACKPANEL DETAIL
TYPE 2 & 3 CABINETS

APRIL 8, 1996

STATE OF LOUISIANA
DEPARTMENT OF TRANSPORTATION AND DEVELOPMENT

DESIGNED JTS/MB | DETAILED JMB | GRAPHICS AREA
CHECKED JP | CHECKED | FILENAME BACKPNL.DGN

DATE	DESCRIPTION	BY
	REVISIONS	

		DRAWING NO.	SHEET NO.
		18A	3

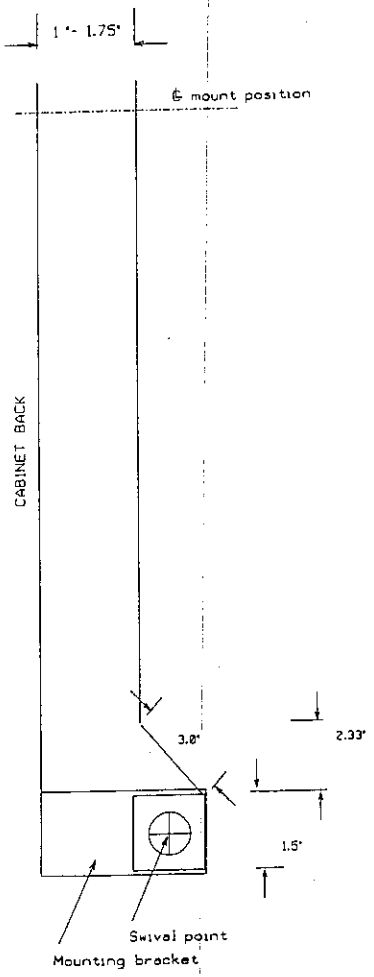

SIDE

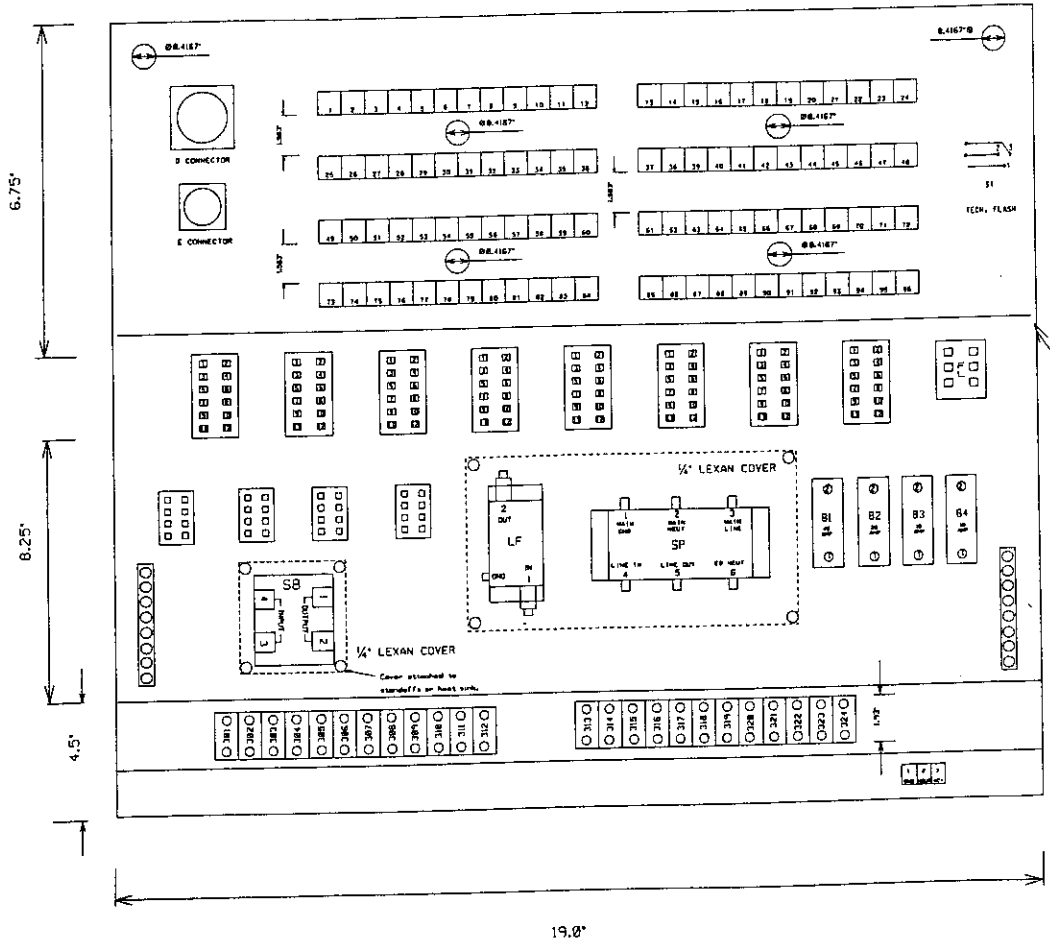

POSITION OF SHELF RELATIVE TO BACK PANEL. SHELF SHALL BE IN FRONT OF BACK PANEL AND MOVEABLE FOR POSITIONING AS REQUIRED IN TCS 18A.

NOTE: POSITION OF TRANSFER RELAY BASES AND SIGNAL BUS RELAY MAY BE CHANGED WITH THE PRIOR APPROVAL OF THE LOUISIANA DOTD SIGNAL ENGINEER.

FRONT

DATE	DESCRIPTION	BY
	REVISIONS	

BACK PANEL DETAIL
TYPE 2 & 3 CABINETS

STATE OF LOUISIANA
DEPARTMENT OF TRANSPORTATION AND DEVELOPMENT

DESIGNED JTY/JMB	DETAILED JMB	GRAPHICS AREA
CHECKED JTY	CHECKED	FILENAME BACKPNL.DGN

		DRAWING NO.	SHEET NO.
		18A	4

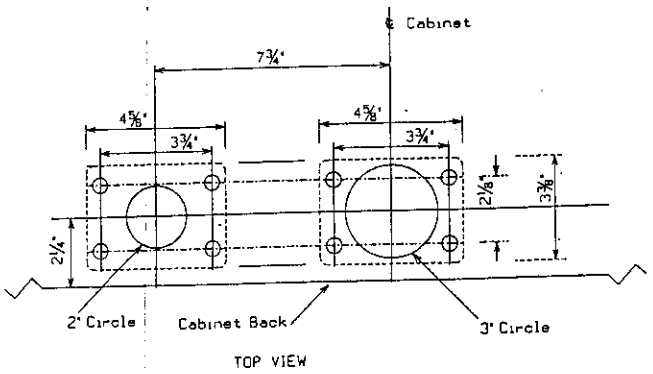

CABINET BOTTOM

CARD RACK MOUNTING SCHEME

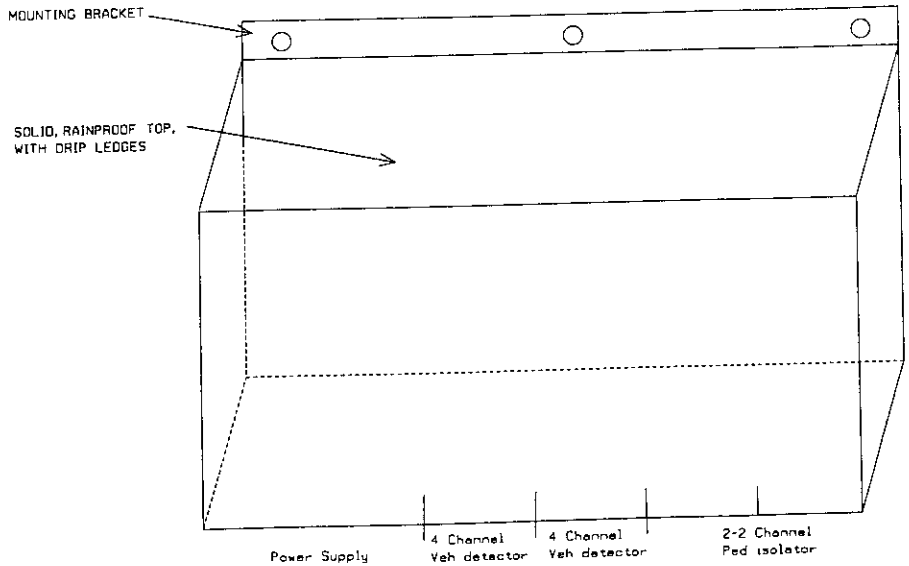

NOTE: CARD RACK SHALL BE MOUNTED ON THE CABINET DOOR. ALTERNATE MOUNTING METHODS SHALL BE APPROVED BY THE DOTD SIGNAL ENGINEER.

Type 3 Cabinets only

DATE	DESCRIPTION	BY
12/22/95	MOVE AUXILLARY PANEL TO SHEET 6.	JLV
02/28/96	ADD CABINET BOTTOM DETAIL.	JLV

REVISIONS

CABINET DETAIL
TYPE 2 & 3 CABINETS

APRIL 8, 1996

STATE OF LOUISIANA
DEPARTMENT OF TRANSPORTATION AND DEVELOPMENT

DESIGNED JLV/JMB | DETAILED JMB | GRAPHICS AREA
CHECKED JLV | CHECKED | FILENAME BACKPNL.DGN

		DRAWING NO.	SHEET NO.
		18A	5

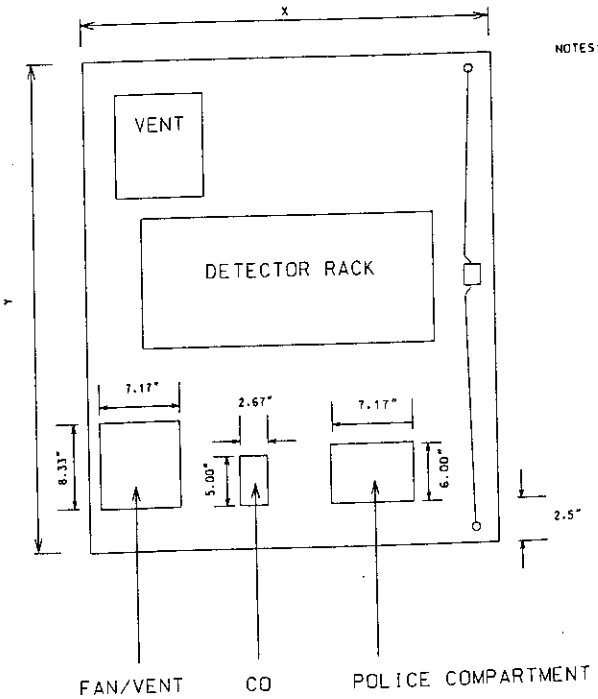

NOTES: Dimensions define maximum area that shall be used by all components and mounting hardware for that device or compartment.

Fan, CO, police compartment and lock arm shall be evenly spaced across the width of cabinet door.

For X and Y dimensions, see TCS18A.

BACK PANEL DETAIL
TYPE 2 & 3 CABINETS

APRIL 8, 1996

STATE OF LOUISIANA
DEPARTMENT OF TRANSPORTATION AND DEVELOPMENT

DATE	DESCRIPTION	BY
	REVISIONS	

DESIGNED JTF/JHB | DETAILED JHB | GRAPHICS AREA
CHECKED JLP | CHECKED | FILENAME BACKPNL.DGN

		DRAWING NO.	SHEET NO.
		TBA	6

DETECTOR PANEL/TYPE 3 & 5 CABINETS

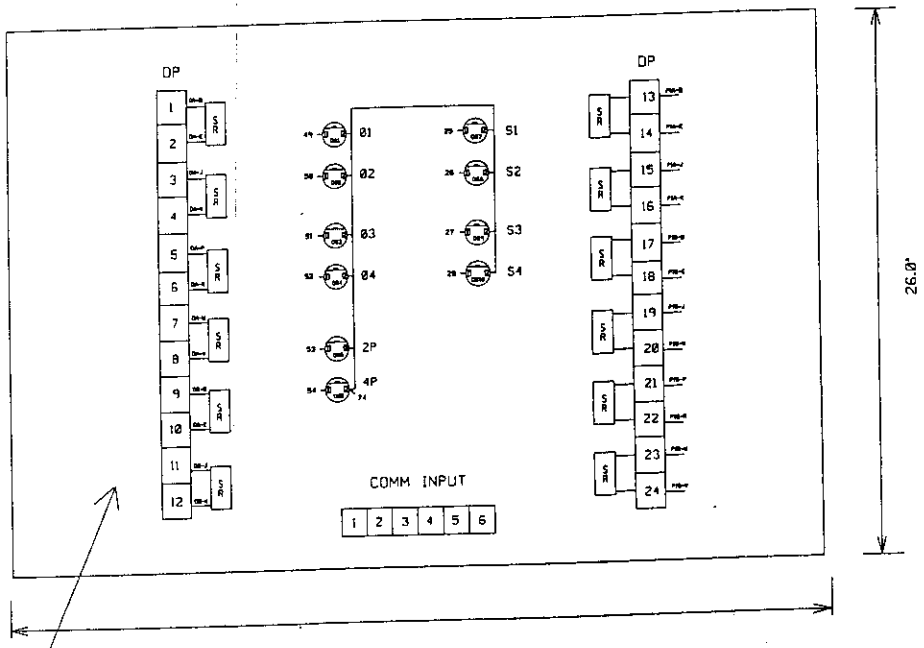

NOTE: LEAVE ENOUGH SLACK IN APPLICABLE WIRES TO MOVE FROM TERMINALS 88 TO 56, 81 TO 57, 82 TO 58, 83 TO 59 AND 84 TO 60.

NOTE: DIMENSIONS ARE MAXIMUM VALUES.

AUXILLARY PANEL/ALL CABINETS

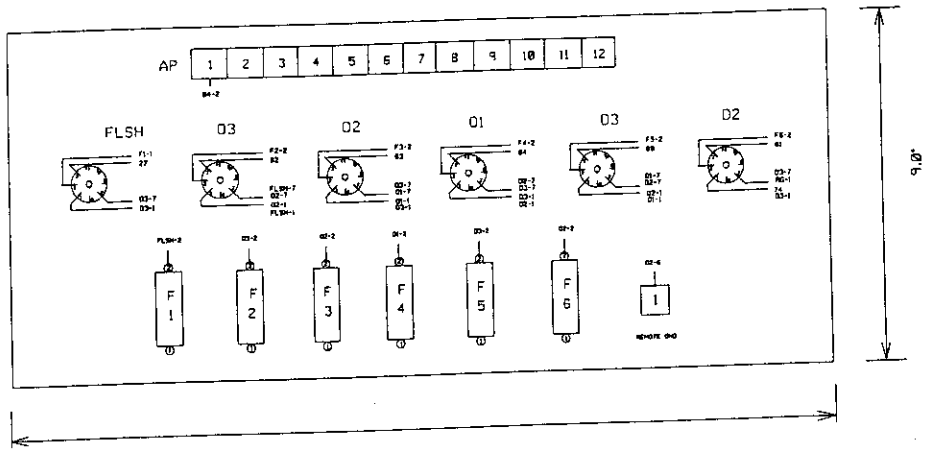

NOTE: Dimensions are maximum values.

CABINET DETAIL
TYPE 2 & 3 CABINETS

APRIL 8, 1996

STATE OF LOUISIANA
DEPARTMENT OF TRANSPORTATION AND DEVELOPMENT

DESIGNED JTY/MB	DETAILED MB	GRAPHICS AREA
CHECKED JTY	CHECKED	FILENAME BACKPNL_SCH

DATE	DESCRIPTION	BY
	REVISIONS	